IGLAND

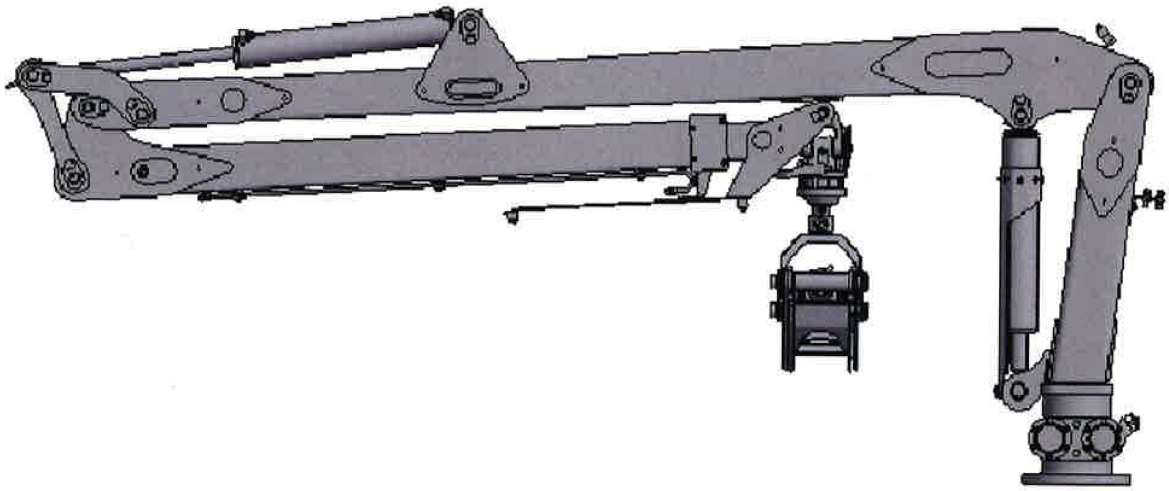

# IGLAND 49-68S

Parts Catalogue

RESERVEDELSLISTE - SPARE PARTS LIST

# Igland 49-68S

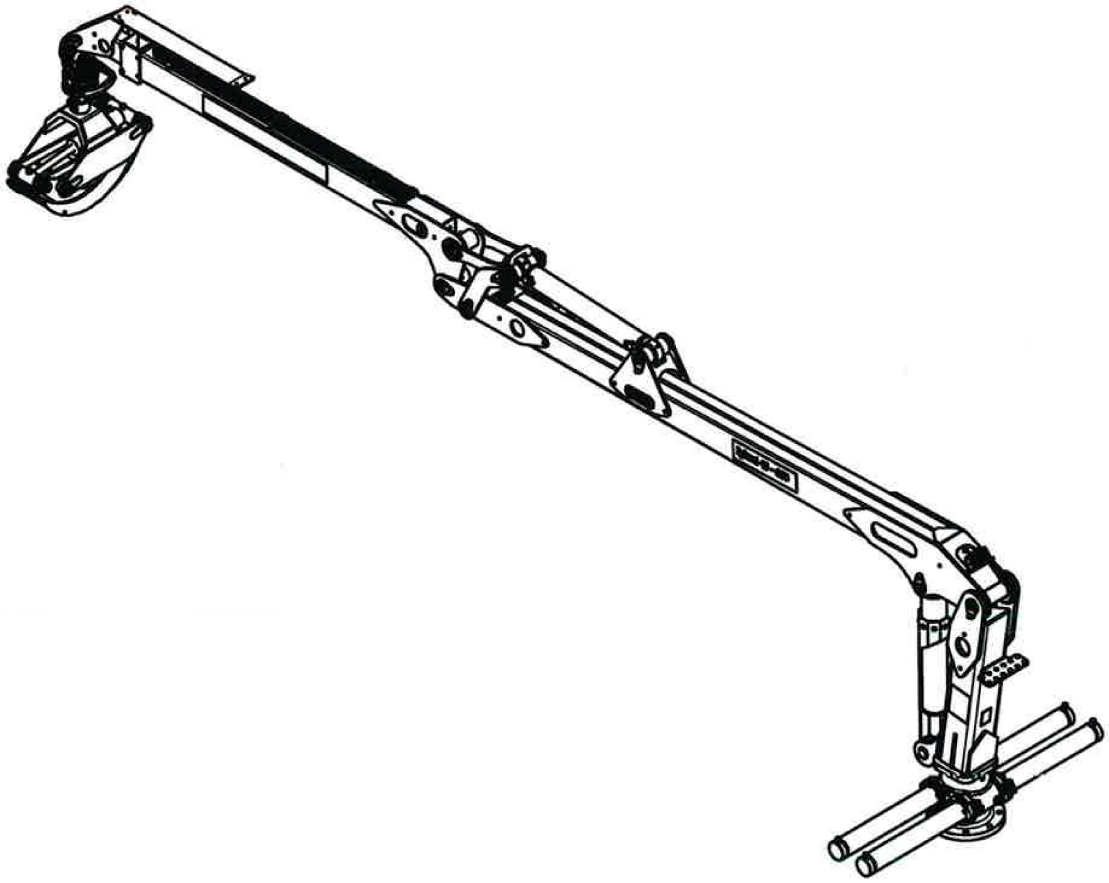

**© Nosted & AS**
- Gjengivelse av tekst og tegninger uten tillatelse forbudt.
- Reproduction of text or illustrations without permission is prohibited.
- Eine wiedergabe von Texten und Zeichnungen ohne unsere Genehmigung ist nicht gestattet.
- Interdiction de taute reproduction de texts ou d'illustations sans autorisation prèalable

Nøsted & AS
Avd. Grimstad
Industriveien 30
4879 Grimstad, Norway
Phone + 47 37 25 62 00
Fax + 47 37 25 62 01
Mail: corporate@igland-as.com
http://www.igland-as.com

| | |
|---|---|
| **Approved:** | Revised: |
| | Issued: 2020.11.20 |
| | P/N 390599 |
| | |

IGLAND

Contents

1. MAIN PARTS..... 4

2. MONTAGE..... 5

3. SWIVEL PILAR ASSEMBLY..... 7

4. CONICAL BOOM ASSEMBLY..... 9

5. TELESCOPIC BOOM ASSEMBLY..... 10

6. DOUBLE - STEAM ASSEMBLY..... 12

7. ROTATOR GR30..... 13

8. LINK BR10-60-25..... 14

9. TELESCOPE HYDRAULIC CYLINDER..... 15

10. TILT HYDRAULIC CYLINDER..... 16

11. LIFT HYDRAULIC CYLINDER..... 17

12. LEGS HYDRAULIC CYLINDER..... 18

12. 3-POINTS FRAME WITH FOLD-DOWN STAB. LEGS..... 19

14. CRANE HANDLING

14.1 HYDRAULIC DIAGRAM 49-68S, 2 LEVER CONTROL PANEL ..... 21

14.1.1 VALVE, 2 LEVER CONTROL PANEL.....23

14.2 HYDRAULIC DIAGRAM 49-68S, LIGHT LEVER CONTROL, ON/OF OPTION.....24

14.2.1 LIGHT 2 LEVER CONTROL, EL. ON/OF.....26

14.2.2 WORKING SECTIONS.....29

14.2.3 LIGHT 2 LEVER CONTROL, EL. ON/OF, ELECTRICAL PARTS.....30

15. STICKERS.....31

16. Appendix:

16.1 Igland 019

16.2 Igland 1601

# 1. MAIN PARTS

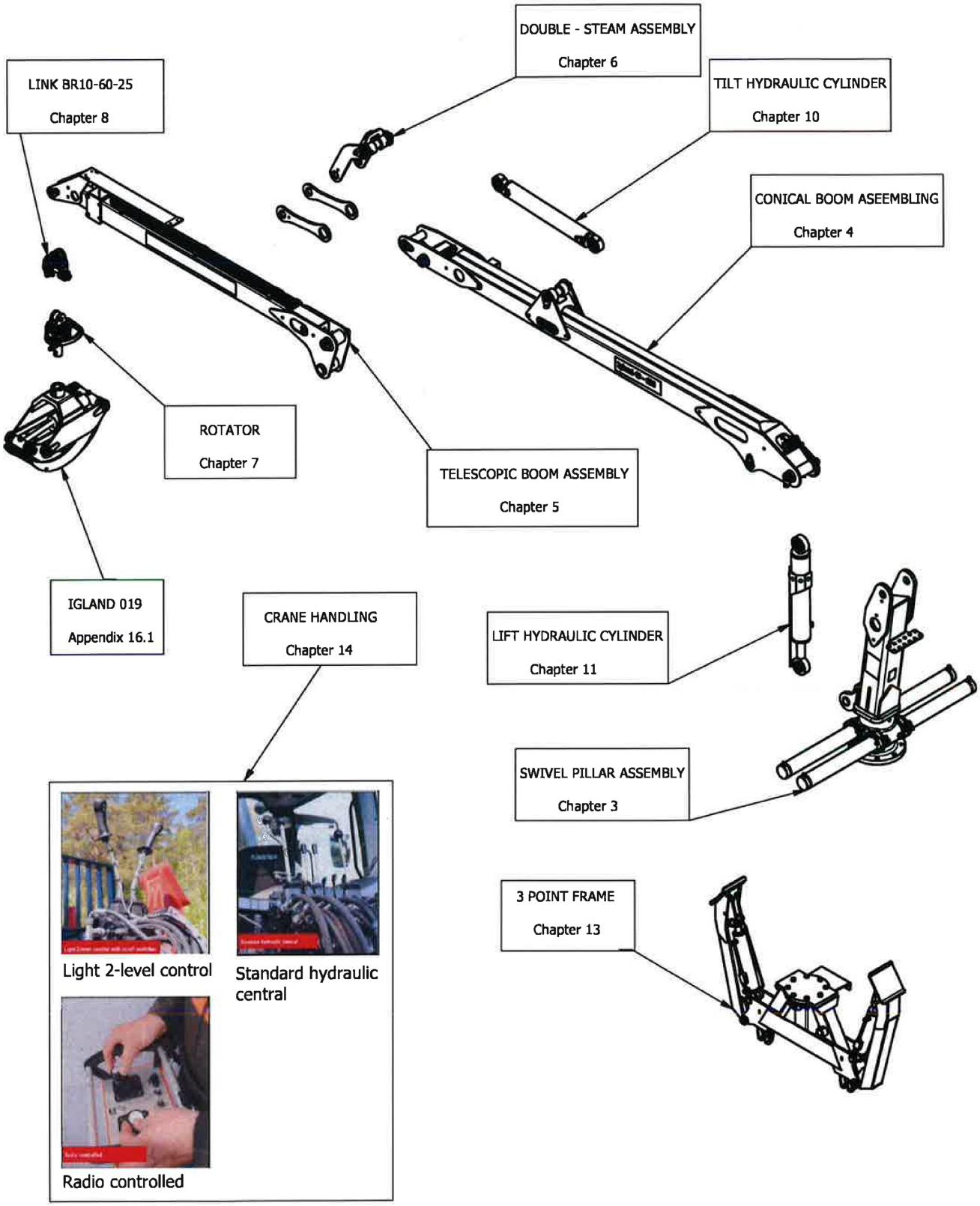
DOUBLE - STEAM ASSEMBLY
Chapter 6
LINK BR10-60-25
Chapter 8
TILT HYDRAULIC CYLINDER
Chapter 10
CONICAL BOOM ASEEMBLING
Chapter 4
ROTATOR
Chapter 7
TELESCOPIC BOOM ASSEMBLY
Chapter 5
IGLAND 019
Appendix 16.1
CRANE HANDLING
Chapter 14
LIFT HYDRAULIC CYLINDER
Chapter 11
SWIVEL PILLAR ASSEMBLY
Chapter 3
3 POINT FRAME
Chapter 13
Light 2-level control
Standard hydraulic central
Radio controlled

## 2. MONTAGE

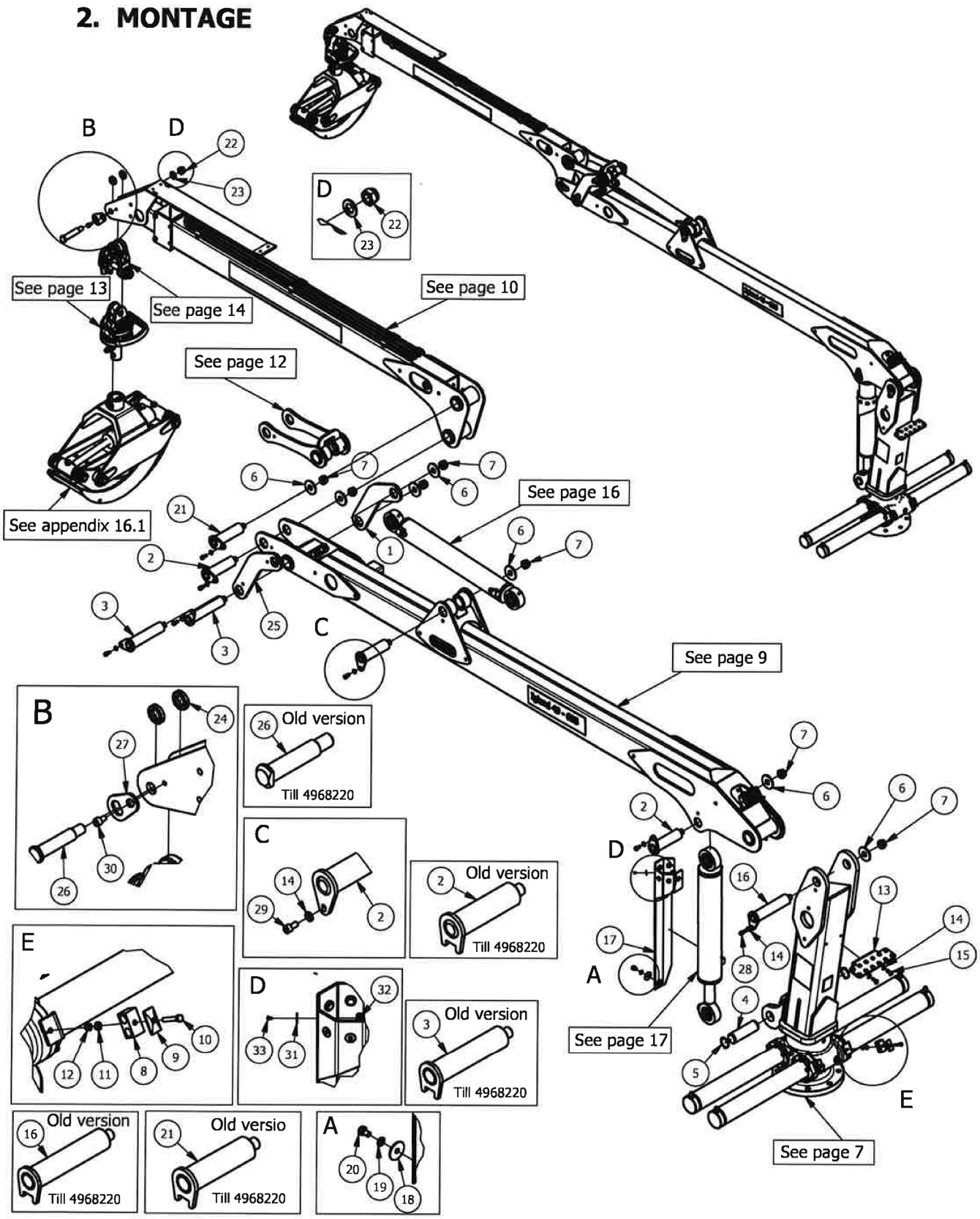
B
D
22
23
D
22
23
See page 13
See page 14
See page 10
See page 12
See appendix 16.1
See page 16
See page 9
See page 17
See page 7
A
C
E
B
24
27
26
30
26
Old version
Till 4968220
C
14
29
2
2
Old version
Till 4968220
E
12
11
8
9
10
D
32
33
31
3
Old version
Till 4968220
16
Old version
Till 4968220
21
Old versio
Till 4968220
A
20
19
18

| RESERVEDELSLISTE – SPARE PARTS LIST | | | | |
|---|---|---|---|---|
| Pos. | Qty | Item No./ Varenummer | Beskrivelse | Description |
| 1 | 1 | IG431236 | Ledd hoyre | Right steam |
| 2 | 3 | IG431257 | Bolt | Pin (4968220→) |
| 2 | 3 | IG431239 | Bolt | Pin (→4968220) |
| 3 | 2 | IG431258 | Bolt | Pin (4968220→) |
| 3 | 2 | IG431240 | Bolt | Pin (→4968220) |
| 4 | 1 | IG431244 | Bolt | Pin |
| 5 | 2 | IG026740 | Låsering | Retaining rings |
| 6 | 7 | IG431272 | Skive | Washer |
| 7 | 7 | IG431273 | Mutter | Hex Nut |
| 8 | 2 | IG431275 | Slangeholder | Plastic retainer |
| 9 | 2 | IG431276 | Dekke | Cover |
| 10 | 2 | IG012767 | Skrue | Hex-Head Bolt |
| 11 | 2 | IG012194 | Skive | Washer |
| 12 | 2 | IG012198 | Mutter | Hex Nut |
| 13 | 1 | IG431246 | Slangeholder | Bracket for holses adaptors |
| 14 | 9 | IG012335 | Skive | Washer |
| 15 | 2 | IG012802 | Skrue | Hex-Head Bolt |
| 16 | 1 | IG431247 | Bolt | Pin (4968220→) |
| 16 | 1 | IG431284 | Bolt | Pin (→4968220) |
| 17 | 1 | IG431248 | Deksel | Cover |
| 18 | 1 | IG012235 | Skive | Washer |
| 19 | 1 | IG012234 | Skive | Spring Washer |
| 20 | 1 | IG012798 | Skrue | Hex-Head Bolt |
| 21 | 1 | IG431259 | Bolt | Pin (4968220→) |
| 21 | 1 | IG431241 | Bolt | Pin (→4968220) |
| 22 | 1 | IG012438 | Mutter | Hex Nut |
| 23 | 1 | IG012434 | Skive | Washer |
| 24 | 2 | IG431274 | Skive | Washer |
| 25 | 1 | IG431235 | Ledd venstre | Left steam |
| 26 | 1 | IG431245 | Bolt | Pin (4968220→) |
| 26 | 1 | IG431283 | Bolt | Pin (→4968220) |
| 27 | 1 | IG433032 | Låseplate | Fix plate |
| 28 | 1 | IG015888 | Skrue | Screw |
| 29 | 6 | IG015886 | Skrue | Screw |
| 30 | 1 | IG015885 | Skrue | Screw |
| 31 | 6 | IG433048 | Skive | Washer |
| 32 | 6 | IG431285 | Støtte | Support |
| 33 | 6 | IG433047 | Skrue | Screw |

## 3. SWIVEL PILAR ASSEMBLY

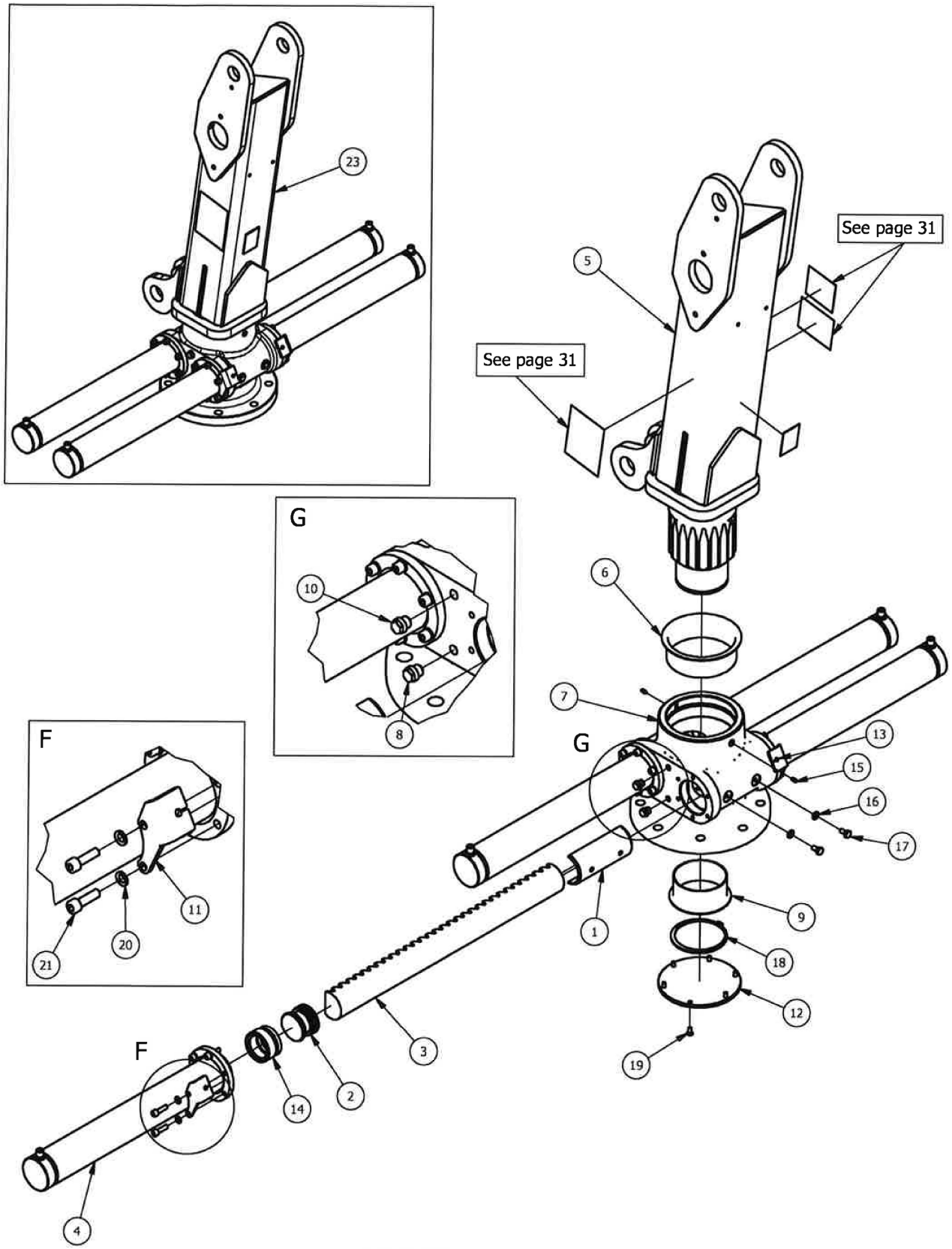

| RESERVEDELSLISTE – SPARE PARTS LIST | | | | |
|---|---|---|---|---|
| Pos. | Qty | Item No./ Varenummer | Beskrivelse | Description |
| 1 | 2 | IG431212 | Glideplate | Skid plate |
| 2 | 4 | IG431213 | Stempel | Piston |
| 3 | 2 | IG431214 | Tannstang | Gear rack |
| 4 | 4 | IG431215 | Sylinderrør | Hydraulic cylinder cover |
| 5 | 1 | IG431216 | Kranstamme | Pillar |
| 6 | 1 | IG431277 | Foring | Bushing |
| 7 | 1 | IG431220 | Svinghus | Gear box |
| 8 | 1 | IG431255 | Plugg, magnet | Plug |
| 9 | 1 | IG431278 | Foring | Bushing |
| 10 | 1 | IG049801 | Plugg | Plug |
| 11 | 1 | IG431217 | Slangeholder, venstre | Hose holder left |
| 12 | 1 | IG431219 | Dekke | Cover |
| 13 | 1 | IG431218 | Slangeholder, hoyre | Hose holder right |
| 14 | 4 | IG431254 | Pakningssett | Gasket set |
| 15 | 2 | IG017409 | Nippel | Lubricating Nipple |
| 16 | 4 | IG012235 | Skive | Washer |
| 17 | 4 | IG012800 | Skrue | Hex-Head Bolt |
| 18 | 1 | IG026782 | Låsering | Retaining rings |
| 19 | 6 | IG016586 | Skrue | Countersunk Screw |
| 20 | 24 | IG012234 | Skive | Spring Washer |
| 21 | 24 | IG014909 | Skrue | Cylinder Head Cap Screw |
| 22 | 1 | IG431279 | Reparasjonssett | Repair kit |
| 23 | 1 | IG431210 | Kranstamme, med svinghus | Pillar complete |

# 4. CONICAL BOOM ASSEMBLY

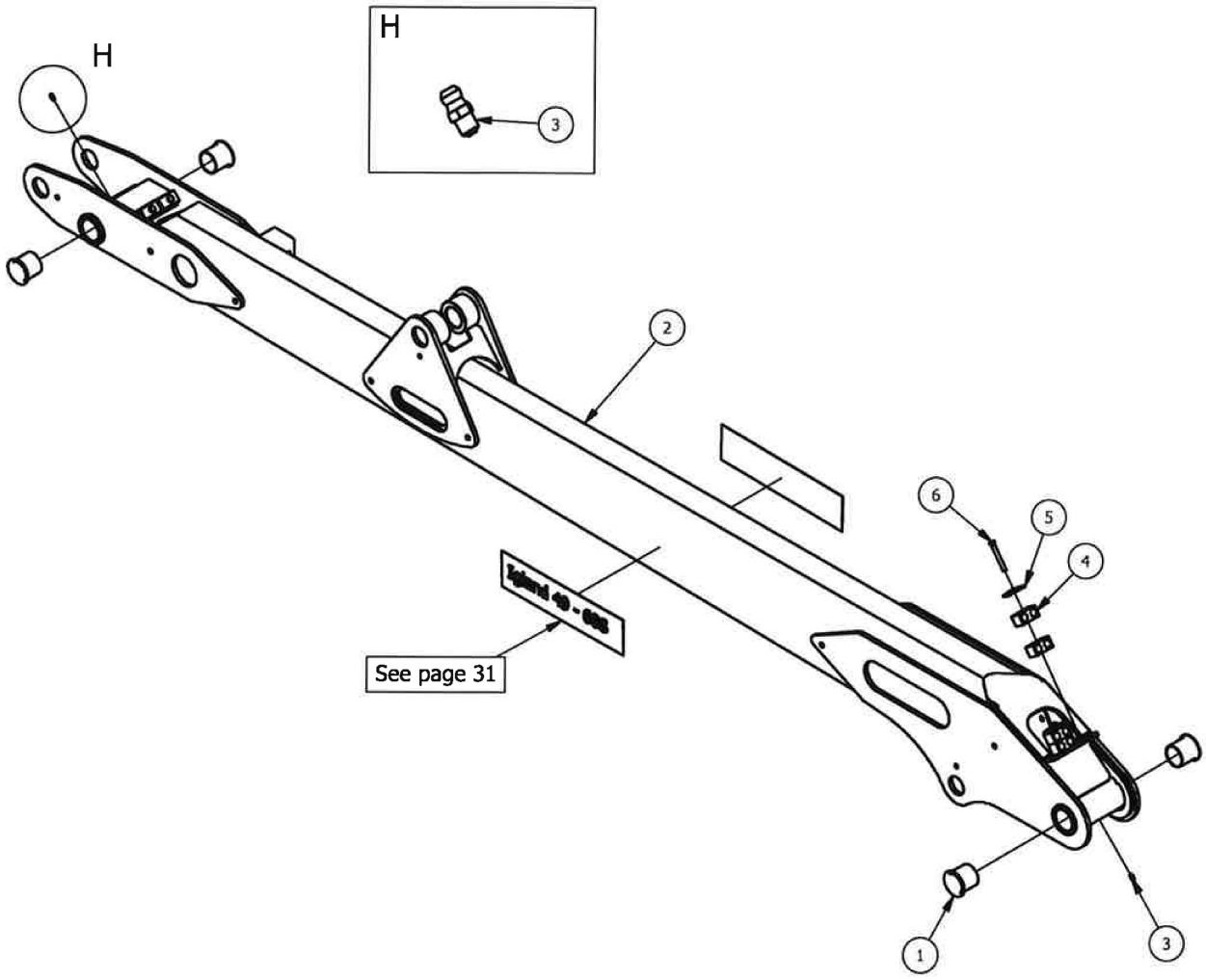


| RESERVEDELSLISTE – SPARE PARTS LIST | | | | |
|---|---|---|---|---|
| Pos. | Qty | Item No./ Varenummer | Beskrivelse | Description |
| 1 | 4 | IG431252 | Foring | Bushing |
| 2 | 1 | IG431222 | Løftebom | Conical boom |
| 3 | 2 | IG017403 | Nippel, smøre | Lubricating Nipple |
| 4 | 7 | IG431275 | Slangeholder | Plastic retainer |
| 5 | 4 | IG431276 | Dekke | Cover |
| 6 | 3 | IG012771 | Skrue | Hex-Head Bolt |

## 5. TELESCOPIC BOOM ASSEMBLY

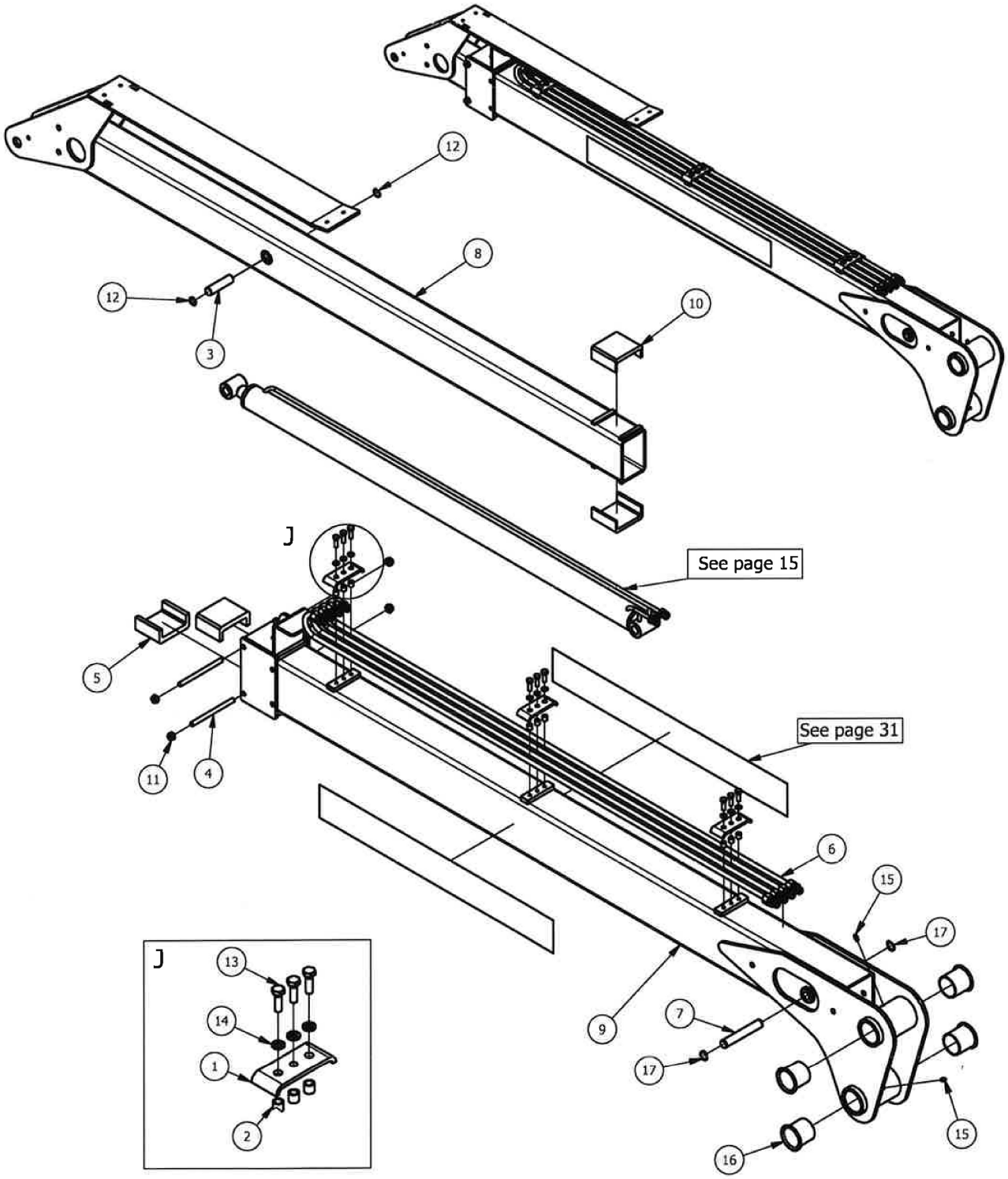

| RESERVEDELSLISTE – SPARE PARTS LIST | | | | |
|---|---|---|---|---|
| Pos. | Qty | Item No./ Varenummer | Beskrivelse | Description |
| 1 | 3 | IG431223 | Rørholder | Hydraulic tube holder |
| 2 | 9 | IG431280 | Foring | Bushing |
| 3 | 1 | IG431224 | Bolt | Pin |
| 4 | 2 | IG431225 | Bolt | Bolt |
| 5 | 2 | IG431226 | Glidekloss | Skid plate |
| 6 | 4 | IG431227 | Rør | Tube |
| 7 | 1 | IG431230 | Bolt | Pin |
| 8 | 1 | IG431231 | Teleskope arm | Telescopic boom |
| 9 | 1 | IG431232 | Vippearm | Jib arm |
| 10 | 2 | IG431233 | Glidekloss | Skid plate |
| 11 | 4 | ÌG012198 | Skrue | Hex Nut |
| 12 | 2 | IG026805 | Låsering | Spring Retaining Ring |
| 13 | 9 | IG012764 | Skrue | Hex-Head Bolt |
| 14 | 9 | IG012195 | Skive, fjær | Spring Washer |
| 15 | 2 | IG017403 | Nippel | Lubricating Nipple |
| 16 | 4 | IG431252 | Foring | Bushing |
| 17 | 2 | IG026716 | Låsering | Retaining rings for shaft |

# 6. DOUBLE - STEAM ASSEMBLY

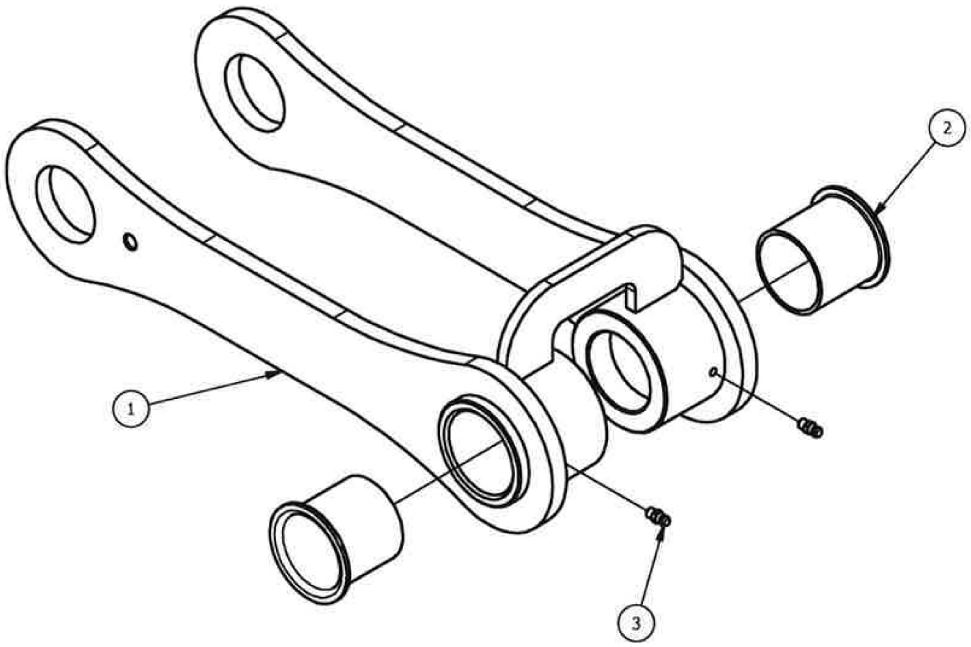


| RESERVEDELSLISTE – SPARE PARTS LIST | | | | |
|---|---|---|---|---|
| Pos. | Qty | Item No./ Varenummer | Beskrivelse | Description |
| 1 | 1 | IG431234 | Ledd | Double link |
| 2 | 2 | IG431252 | Foring | Bushing |
| 3 | 2 | IG017403 | Nippel | Lubricating Nipple |

# 7. ROTATOR GR30

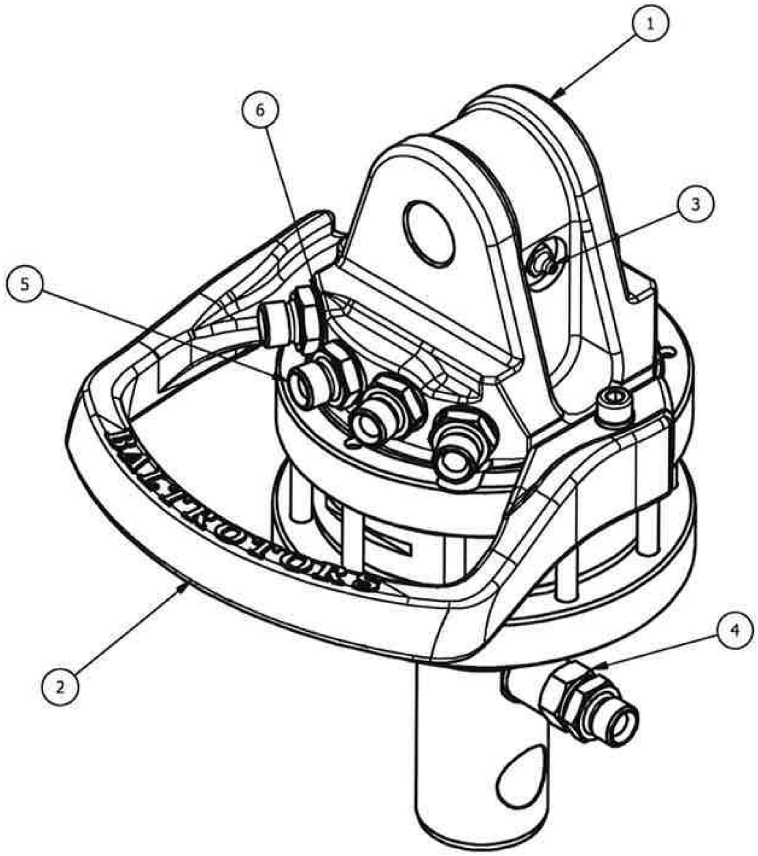


| RESERVEDELSLISTE – SPARE PARTS LIST | | | | |
|---|---|---|---|---|
| Pos. | Qty | Item No./ Varenummer | Beskrivelse | Description |
| 1 | 1 | IG430700 | Rotator, komplett | Rotator GR30 |
| 2 | 1 | IG430706 | Slangebeskyttelse | Hose guard |
| 3 | 1 | IG430705 | Smørenippel | Grease nipple |
| 4 | 2 | IG430707 | Nippel | Nipple |
| 5 | 6 | IG048009 | Nippel | Nipple |
| 6 | 8 | IG047142 | Pakning | Bonded seal |
| | 1 | IG430705 | Reparasjonssett | Repair kit |

## 8. LINK BR10-60-25

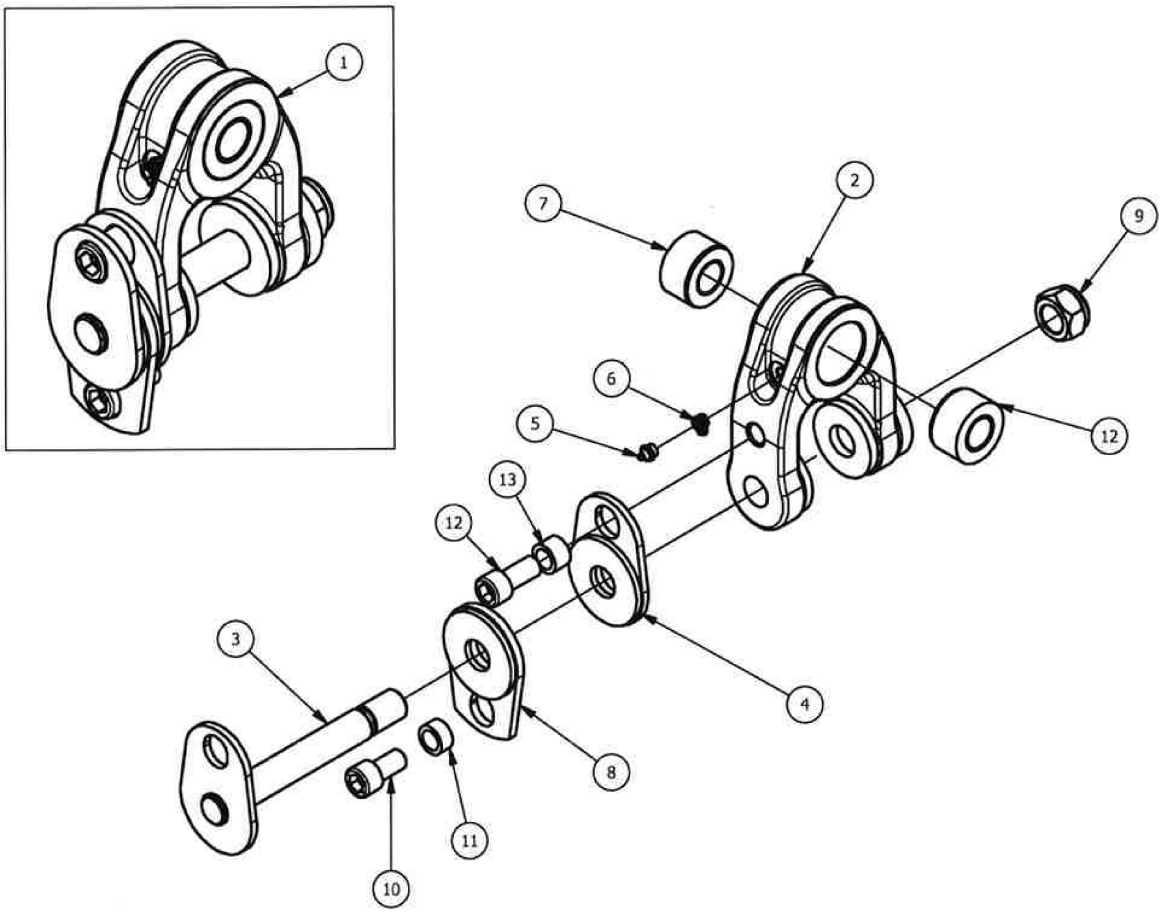


| RESERVEDELSLISTE – SPARE PARTS LIST | | | | |
|---|---|---|---|---|
| Pos. | Qty | Item No./ Varenummer | Beskrivelse | Description |
| 1 | 1 | IG431260 | Ledd, komplett | Complete link |
| 2 | 1 | IG431261 | Ledd | Link |
| 3 | 1 | IG431262 | Bolt med brems | Pin with brake |
| 4 | 1 | IG431263 | Skive, brems | Planch with brake |
| 5 | 1 | IG431271 | Smørenippel | Grease nipple |
| 6 | 1 | IG431281 | Hette, smørenippel | Grease nipple cover |
| 7 | 1 | IG431264 | Foring | Bushing |
| 8 | 1 | IG430482 | Skive | Planch |
| 9 | 1 | IG431267 | Mutter | Nut |
| 10 | 1 | IG431269 | Skrue | Bolt |
| 11 | 1 | IG431265 | Skive | Washer |
| 12 | 1 | IG431268 | Skrue | Bolt |
| 13 | 1 | IG430485 | Skive | Washer |

# 9. TELESCOPE HYDRAULIC CYLINDER

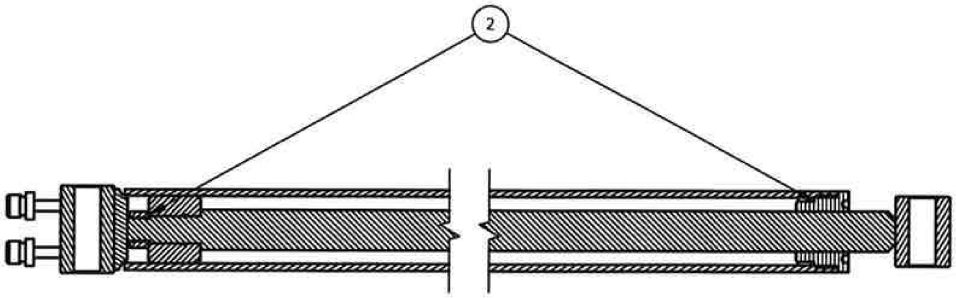


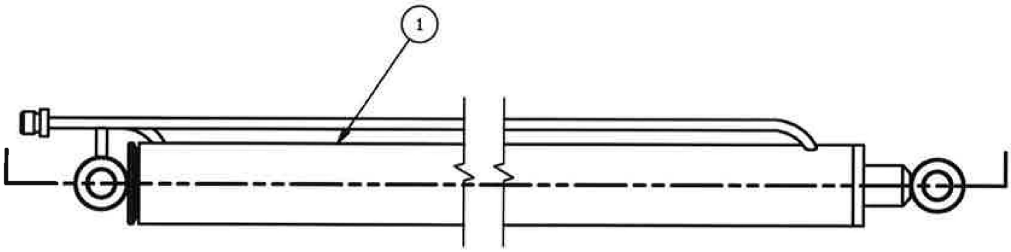


| RESERVEDELSLISTE – SPARE PARTS LIST | | | | |
|---|---|---|---|---|
| Pos. | Qty | Item No./ Varenummer | Beskrivelse | Description |
| 1 | 1 | IG431228 | Sylinder, for teleskop | Hydraulic cylinder telescope |
| 2 | 1 | IG431229 | Pakningssett | Cylinder repair kit |

# 10. TILT HYDRAULIC CYLINDER

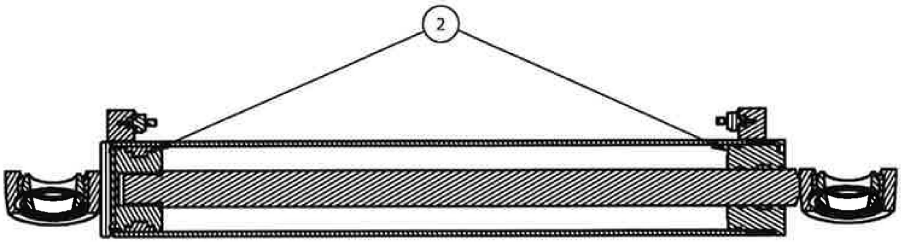


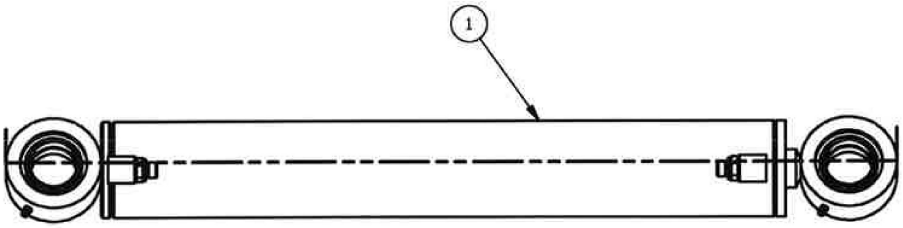


| RESERVEDELSLISTE – SPARE PARTS LIST | | | | |
|---|---|---|---|---|
| Pos. | Qty | Item No./ Varenummer | Beskrivelse | Description |
| 1 | 1 | IG431242 | Sylinder, tilt | Tilt hydraulic cylinder |
| 2 | 1 | IG431243 | Pakingssett | Tilt hydraulic cylinder repair kit |

# 11. LIFT HYDRAULIC CYLINDER

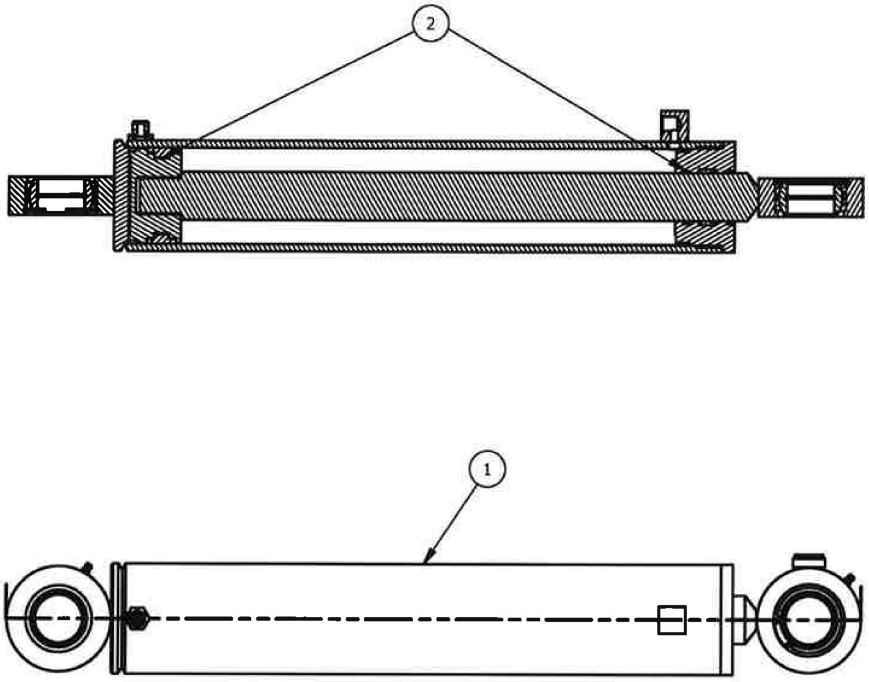


| RESERVEDELSLISTE – SPARE PARTS LIST | | | | |
|---|---|---|---|---|
| Pos. | Qty | Item No./ Varenummer | Beskrivelse | Description |
| 1 | 1 | IG431237 | Sylinder, løfte | Lift hydraulic cylinder |
| 2 | 1 | IG431238 | Pakingssett | Lift hydraulic cylinder repair kit |

# 12. LEGS HYDRAULIC CYLINDER

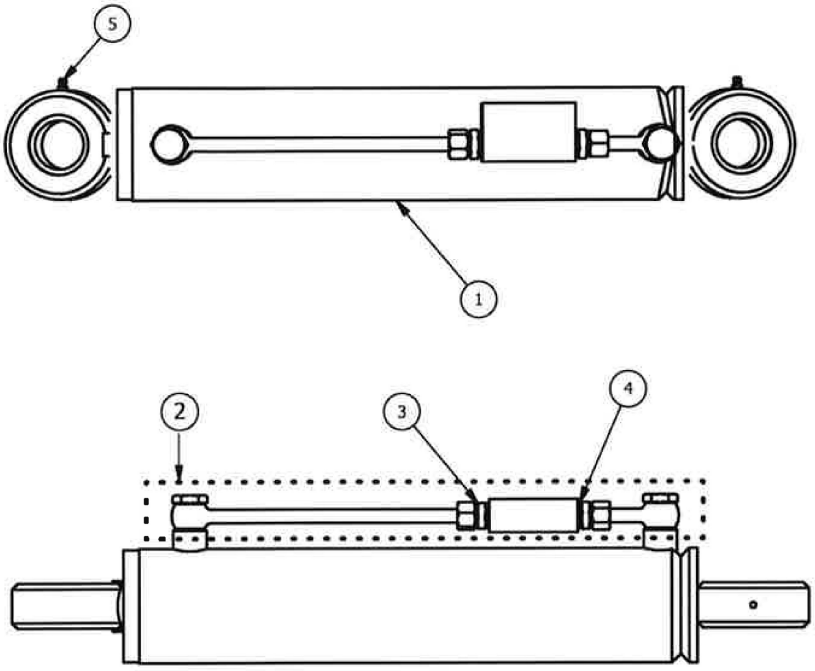


| RESERVEDELSLISTE – SPARE PARTS LIST | | | | |
|---|---|---|---|---|
| Pos. | Qty | Item No./ Varenummer | Beskrivelse | Description |
| 1 | 1 | IG423036 | Sylinder, komplett | Cylinder, complete |
| 2 | 1 | IG420212 | Låsin sett | Cylinder lock kit |
| 3 | 2 | IG048009 | Nippel | Fitting |
| 4 | 7 | IG047142 | Skive m/gummipakning | Washer w/rubber |
| 5 | 2 | IG017404 | Fettnippel | Lubricating Nipple |
| 6 | 1 | IG423037 | Pakningsett | Seals kit |

## 12. 3-POINT FRAME WITH FOLD-DOWN STAB. LEGS

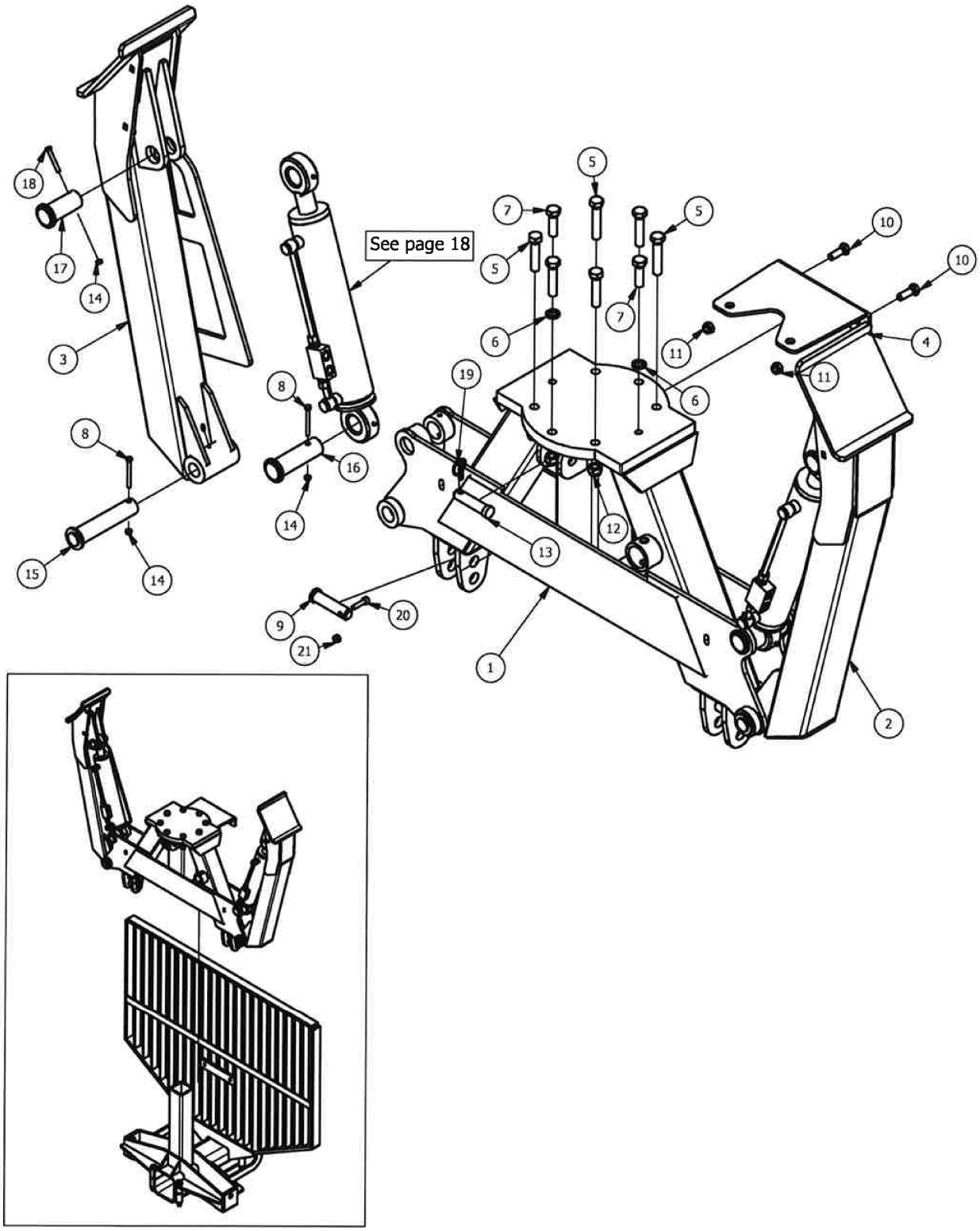

| RESERVEDELSLISTE – SPARE PARTS LIST | | | | |
|---|---|---|---|---|
| Pos. | Qty | Item No./ Varenummer | Beskrivelse | Description |
| 1 | 1 | IG423021 | 3-pkt. ramme | 3-point frame |
| 2 | 1 | IG423025 | Lavettbein, venstre | Stabilizer leg, left |
| 3 | 1 | IG423024 | Lavettbein, høyre | Stabilizer leg, right |
| 4 | 1 | IG423022 | Festeplate, for 450/480 henger | Fixing plate |
| 5 | 6 | IG013621 | Skrue | Hex-Head Bolt |
| 6 | 14 | IG724056 | Skive | Spring Washer |
| 7 | 2 | IG012410 | Skrue | Hex-Head Bolt |
| 8 | 5 | IG012169 | Skrue | Hex-Head Bolt |
| 9 | 2 | IG020580 | Bolt | Pin |
| 10 | 2 | IG012926 | Skrue | Hex-Head Bolt |
| 11 | 2 | IG012350 | Mutter | Hex Nut |
| 12 | 6 | IG013611 | Mutter | Hex Nut |
| 13 | 1 | IG020185 | Bolt | Pin |
| 14 | 6 | IG012198 | Mutter | Hex Nut |
| 15 | 2 | IG020715 | Bolt | Pin |
| 16 | 2 | IG020703 | Bolt | Pin |
| 17 | 2 | IG020730 | Bolt | Pin |
| 18 | 2 | IG012164 | Skrue | Hex-Head Bolt |
| 19 | 1 | IG021004 | Orepinne | Linch pin |
| 20 | 2 | IG012805 | Skrue | Cylinder Head Cap Screw |
| 21 | 2 | IG012231 | Mutter | Hex Nut |

## 14.1 HYDRAULIC DIAGRAM 49-68S, 2 LEVER CONTROL PANEL

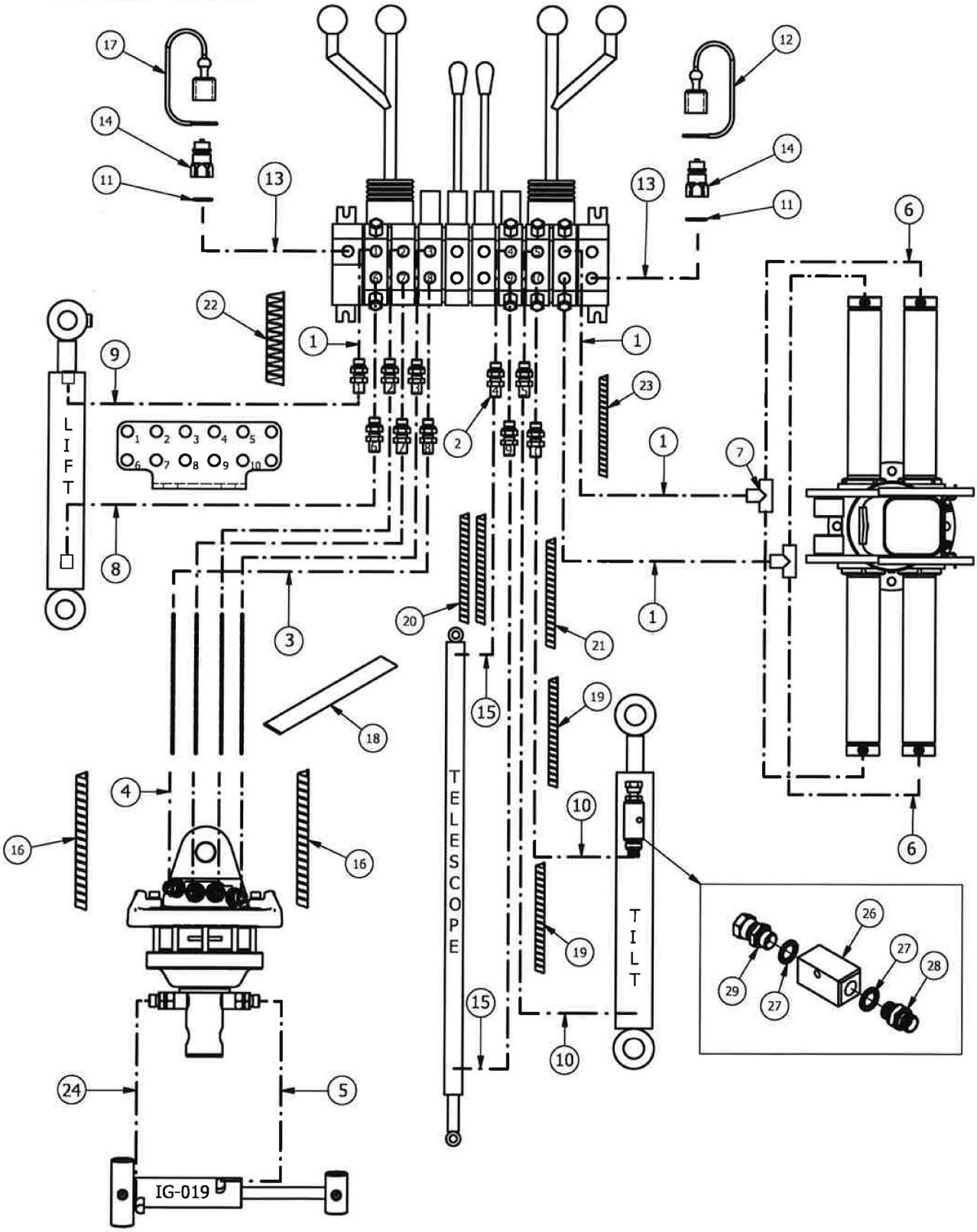

| RESERVEDELSLISTE – SPARE PARTS LIST | | | | |
|---|---|---|---|---|
| Pos. | Qty | Item No./ Varenummer | Beskrivelse | Description |
| 1 | 12 | IG058025 | Slange, 2.5 m | Hose 2.5 m |
| 2 | 10 | IG048011 | Nippel | Adapter |
| 3 | 4 | IG058040 | Slange, 5 m | Hose 5 m |
| 4 | 4 | IG058327 | Slange, 2.7 m | Hose 2.7 m |
| 5 | 1 | IG058005 | Slange, 0.43 m | Hose 0.43 m |
| 6 | 4 | IG058341 | Slange, 0.7 m | Hose 0.7 m |
| 7 | 2 | IG048448 | T-kobling | Adapter |
| 8 | 1 | IG058342 | Slange, 1.15 m | Hose 1.15 m |
| 9 | 1 | IG058017 | Slange, 1.7 m | Hose 1.7 m |
| 10 | 2 | IG058031 | Slange, 3.55 m | Hose 3.55 m |
| 11 | 2 | IG047143 | Skive m/gummipakning | Washer w/rubber |
| 12 | 1 | IG047033 | Støvhette | Dust protection |
| 13 | 2 | IG059016 | Slange, 1.6 m | Hose 1.6 m |
| 14 | 2 | IG047032 | Hurtigkobling han | Quick coupler han |
| 15 | 2 | IG058039 | Slange, 4.9 m | Hose 4.9 m |
| 16 | 2 | IG017521 | Beskyttelsesspiral | Plastic protection spiral |
| 17 | 1 | IG047034 | Støvhette | Dust protection |
| 18 | 1 | IG017607 | Beskyttelsesspiral | Hose protection |
| 19 | 2 | IG017520 | Beskyttelsesspiral | Plastic protection spiral |
| 20 | 2 | IG017523 | Beskyttelsesspiral | Plastic protection spiral |
| 21 | 1 | IG017522 | Beskyttelsesspiral | Plastic protection spiral |
| 22 | 1 | IG017525 | Beskyttelsesspiral | Plastic protection spiral |
| 23 | 1 | IG017524 | Beskyttelsesspiral | Plastic protection spiral |
| 24 | 1 | IG058006 | Slange, 0.58 m | Hose 0.58 m |
| 25 | 1 | IG430720 | Betjeningssentral | Control valve, complete |
| 26 | 1 | IG090052 | Ventil | Flow restrictor |
| 27 | 2 | IG047142 | Skive m/gummipakning | Washer w/rubber |
| 28 | 1 | IG048009 | Nippel | Fitting |
| 29 | 1 | IG048068 | Nippel | Adapter |

## 14.1.1 VALVE, 2 LEVER CONTROL PANEL

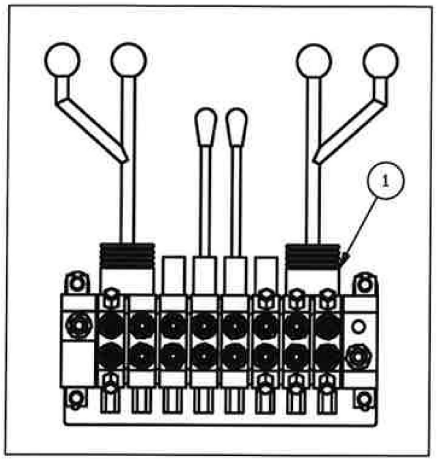


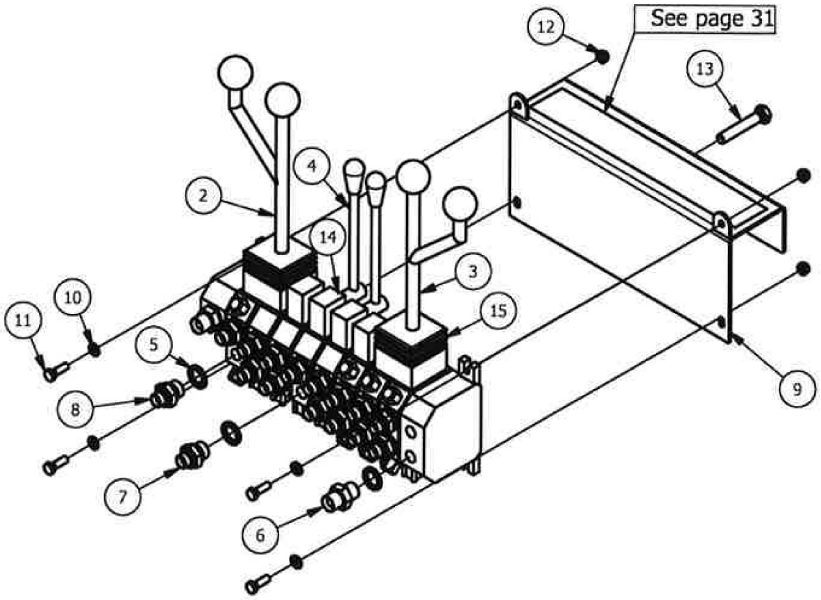


| RESERVEDELSLISTE – SPARE PARTS LIST | | | | |
|---|---|---|---|---|
| Pos. | Qty | Item No./ Varenummer | Beskrivelse | Description |
| 1 | 1 | IG430720 | Betjeningssentral | Control valve, complete |
| 1A | 1 | IG430610 | Pakningssett | Seals kit |
| 2 | 1 | IG430750 | Spak H | Lever right |
| 3 | 1 | IG430752 | Spak v | Lever left |
| 4 | 2 | IG430614 | Spak med feste | Lever |
| 5 | 18 | IG047143 | Skive m/gummipakning | Washer w/rubber |
| 6 | 2 | IG048014 | Nippel | Adapter |
| 7 | 12 | IG048010 | Nippel | Adapter |
| 8 | 4 | IG049966 | Nippel | Adapter |
| 9 | 1 | IG430760 | Ventilholder | Valve holder |
| 10 | 4 | IG012194 | Skive | Washer |
| 11 | 4 | IG012762 | Skrue | Hex-Head Bolt |
| 12 | 4 | IG012198 | Mutter | Hex Nut |
| 13 | 1 | IG012251 | Skrue | Hex-Head Bolt |
| 14 | 4 | IG430617 | Gummimansjett | Rubber protection |
| 15 | 2 | IG430612 | Gummimansjett | Rubber protection |

## 14.2 HYDRAULIC DIAGRAM 49-68S, LIGHT 2 LEVER CONTROL, ON/OF OPTION

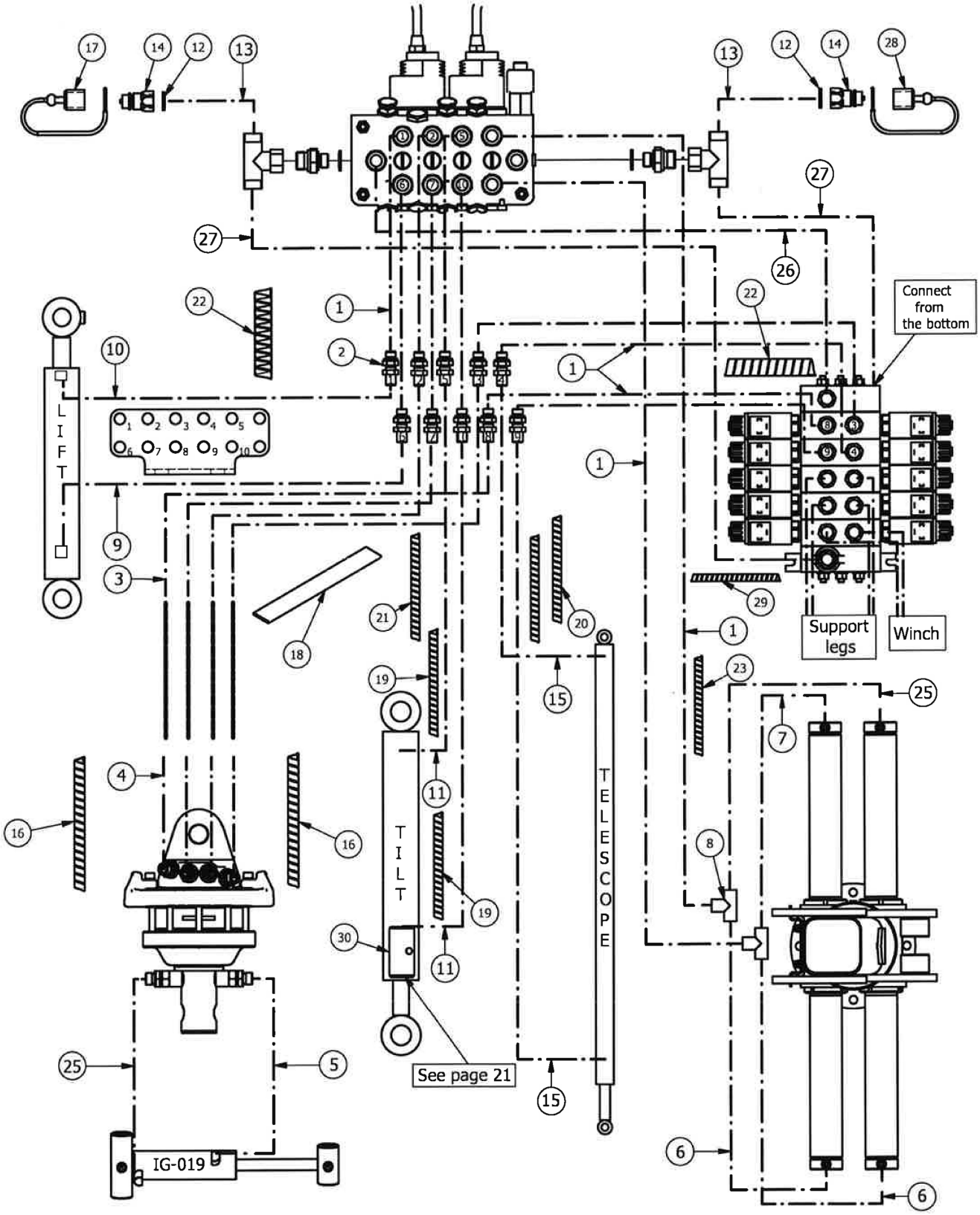

| RESERVEDELSLISTE – SPARE PARTS LIST | | | | |
|---|---|---|---|---|
| Pos. | Qty | Item No./ Varenummer | Beskrivelse | Description |
| 1 | 12 | IG058025 | Slange, 2.5 m | Hose 2.5 m |
| 2 | 10 | IG048011 | Nippel | Adapter |
| 3 | 4 | IG058040 | Slange, 5 m | Hose 5 m |
| 4 | 4 | IG058327 | Slange, 2.7 m | Hose 2.7 m |
| 5 | 1 | IG058005 | Slange, 0.43 m | Hose 0.43 m |
| 6 | 2 | IG058341 | Slange, 0.7 m | Hose 0.7 m |
| 7 | 1 | IG058307 | Slange, 0.75 m | Hose 0.75 m |
| 8 | 2 | IG048448 | T-kobling | Adapter |
| 9 | 1 | IG058342 | Slange, 1.15 m | Hose 1.15 m |
| 10 | 1 | IG058017 | Slange, 1.7 m | Hose 1.7 m |
| 11 | 2 | IG058031 | Slange, 3.55 m | Hose 3.55 m |
| 12 | 2 | IG047143 | Skive m/gummipakning | Washer w/rubber |
| 13 | 2 | IG059016 | Slange, 1.6 m | Hose 1.6 m |
| 14 | 2 | IG047032 | Hurtigkobling han | Quick coupler han |
| 15 | 2 | IG058039 | Slange, 4.9 m | Hose 4.9 m |
| 16 | 2 | IG017521 | Beskyttelsesspiral | Plastic protection spiral |
| 17 | 1 | IG047034 | Støvhette | Dust protection |
| 18 | 1 | IG017607 | Beskyttelsesspiral | Hose protection |
| 19 | 2 | IG017520 | Beskyttelsesspiral | Plastic protection spiral |
| 20 | 2 | IG017523 | Beskyttelsesspiral | Plastic protection spiral |
| 21 | 1 | IG017522 | Beskyttelsesspiral | Plastic protection spiral |
| 22 | 2 | IG017525 | Beskyttelsesspiral | Plastic protection spiral |
| 23 | 1 | IG017524 | Beskyttelsesspiral | Plastic protection spiral |
| 24 | 1 | IG058006 | Slange, 0.58 m | Hose 0.58 m |
| 25 | 1 | IG058308 | Slange, 0.8 m | Hose 0.8 m |
| 26 | 1 | IG058029 | Slange, 2.9 m | Hose 2.9 m |
| 27 | 2 | IG058328 | Slange, 2.8 m | Hose 2.8 m |
| 28 | 1 | IG047033 | Støvhette | Dust protection |
| 29 | 1 | IG017526 | Beskyttelsesspiral | Plastic protection spiral |
| 30 | 1 | IG090052 | Ventil | Flow restrictor |

## 14.2.1 LIGHT 2 LEVER CONTROL, EL. ON/OF

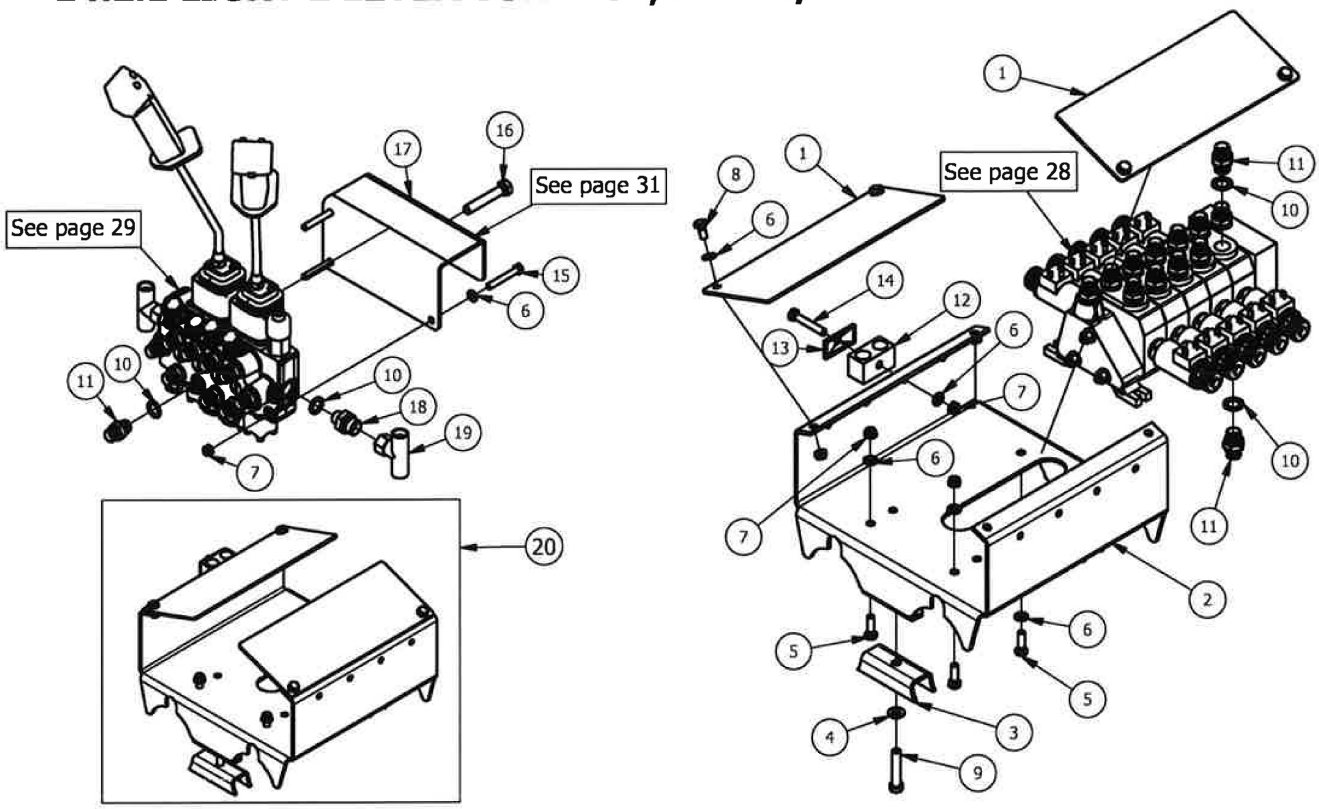


| RESERVEDELSLISTE – SPARE PARTS LIST | | | | |
|---|---|---|---|---|
| Pos. | Qty | Item No./ Varenummer | Beskrivelse | Description |
| 1 | 2 | IG430744 | Dekke | Cover |
| 2 | 1 | IG430745 | Festebrakett | Cover frame |
| 3 | 2 | IG430746 | Ventilholder | Holder |
| 4 | 4 | IG012235 | Skive | Washer |
| 5 | 4 | IG012762 | Skrue | Hex-Head Bolt |
| 6 | 12 | IG012194 | Skive | Washer |
| 7 | 8 | IG012198 | Mutter | Hex Nut |
| 8 | 4 | IG012758 | Skrue | Hex-Head Bolt |
| 9 | 2 | IG015892 | Skrue | Cylinder Head Cap Screw |
| 10 | 25 | IG047142 | Skive m/gummipakning | Washer w/rubber |
| 11 | 23 | IG048009 | Nippel | Adapter |
| 12 | 1 | IG431275 | Slangeholder | Plastic retainer |
| 13 | 1 | IG431276 | Dekke | Cover |
| 14 | 1 | IG012767 | Skrue | Hex-Head Bolt |
| 15 | 3 | IG012168 | Skrue | Hex-Head Bolt |
| 16 | 1 | IG012251 | Skrue | Hex-Head Bolt |
| 17 | 1 | IG430761 | Holder | Holder |
| 18 | 2 | IG048010 | Nippel | Adapter |
| 19 | 2 | IG048456 | T-kobling | Adapter |
| 20 | 1 | IG430740 | Festebrakett, komplett | Mounting bracket, complete |

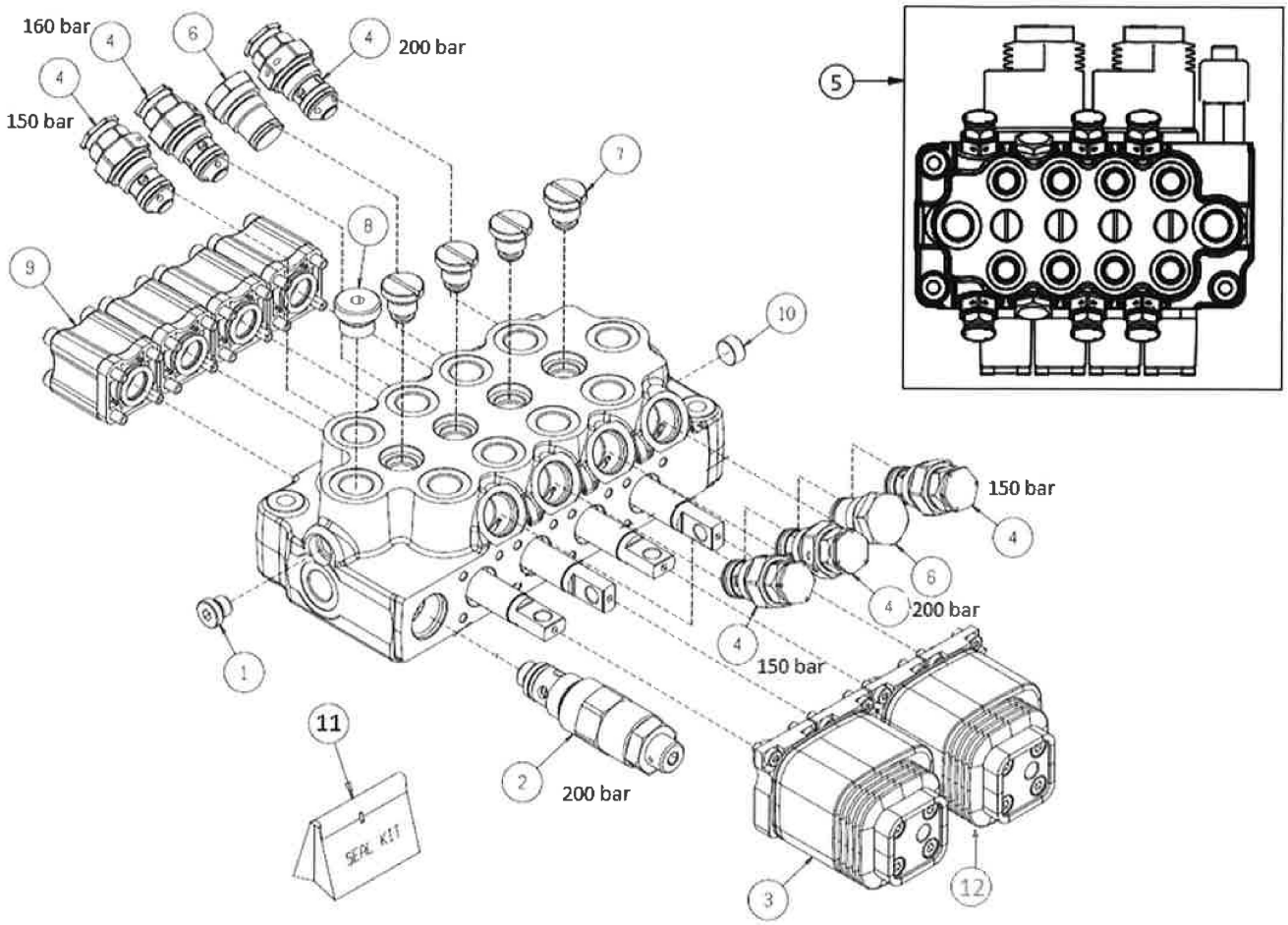


| RESERVEDELSLISTE – SPARE PARTS LIST | | | | |
|---|---|---|---|---|
| Pos. | Qty | Item No./ Varenummer | Beskrivelse | Description |
| 1 | 1 | IG431705 | Plugg | Plug |
| 2 | 1 | IG431706 | Sjokkventil | Shock valve |
| 3 | 2 | IG431707 | Deksel | Top cover |
| 4 | 6 | IG431708 | Sjokkventil | Shock valve |
| 5 | 1 | IG430770 | Ventil komplett | Valve complete |
| 6 | 2 | IG431710 | Plugg | Plug |
| 7 | 4 | IG431711 | Plugg | Plug |
| 8 | 1 | IG431712 | Pluigg | Plug |
| 9 | 4 | IG431713 | Bunndeksel | Buttom cover |
| 10 | 1 | IG431714 | Plugg | Plug |
| 11 | 1 | IG431715 | Pakningssett | Seal kit |
| 12 | 2 | IG430734 | Gummimansjett for 431707 | Rubber protection |

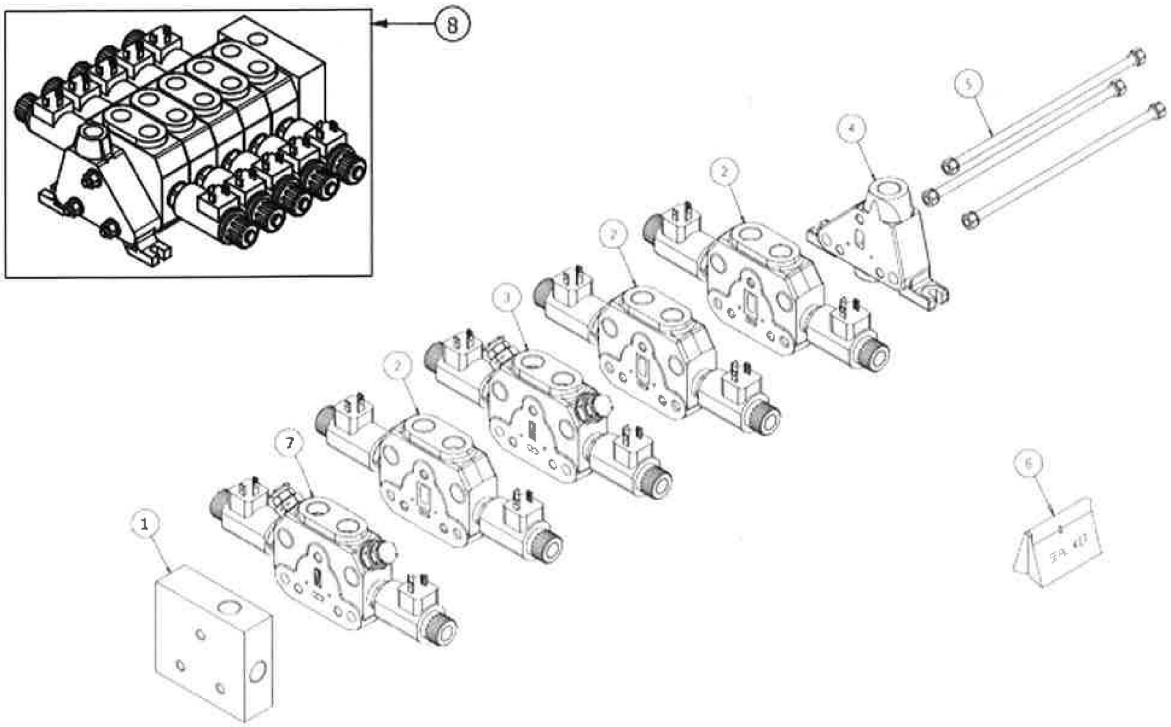


| RESERVEDELSLISTE – SPARE PARTS LIST | | | | |
|---|---|---|---|---|
| Pos. | Qty | Item No./ Varenummer | Beskrivelse | Description |
| 1 | 1 | IG431716 | Endeseksjon | End section |
| 2 | 3 | IG431717 | Ventil | Working section |
| 3 | 1 | IG431718 | Ventil | Working section |
| 4 | 1 | IG431719 | Endeseksjon | End section |
| 5 | 3 | IG431731 | Bolt | Pin |
| 6 | 1 | IG431721 | Pakningssett | Seal kit |
| 7 | 1 | IG430730 | Ventil | Working section |
| 8 | 1 | IG430771 | Ventil komplett | Valve complete |

## 14.2.2 WORKING SECTIONS

Working section with shock valve

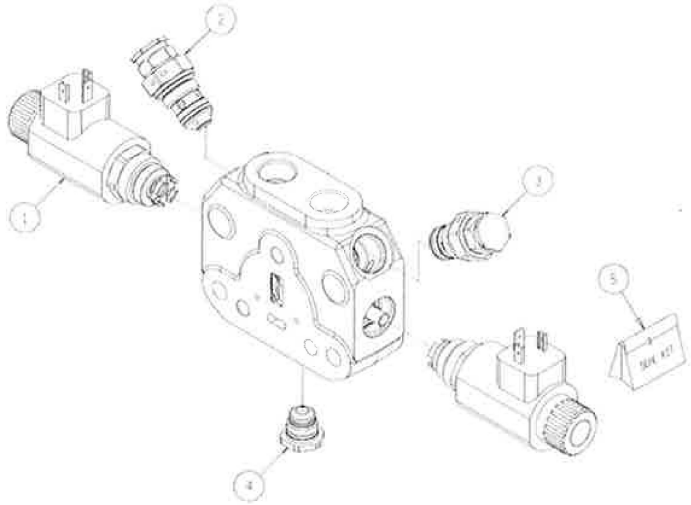

| RESERVEDELSLISTE – SPARE PARTS LIST | | | | |
|---|---|---|---|---|
| Pos. | Qty | Item No./ Varenummer | Beskrivelse | Description |
| 1 | 2 | IG431724 | Magnetventil | Solenoid 12V |
| 2 | 2 | IG431708 | Sjokkventil | Shock valve (must be set) |
| 4 | 1 | IG431727 | Plugg | Plug |
| 5 | 1 | IG431728 | Pakningssett | Seal kit |

Working section without shock valve

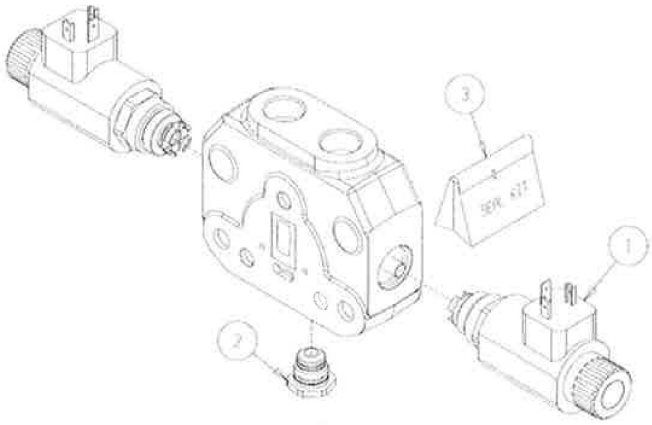

| RESERVEDELSLISTE – SPARE PARTS LIST | | | | |
|---|---|---|---|---|
| Pos. | Qty | Item No./ Varenummer | Beskrivelse | Description |
| 1 | 2 | IG431724 | Magnetventil | Solenoid 12V |
| 2 | 1 | IG431727 | Plugg | Plug |
| 3 | 1 | IG431729 | Pakningssett | Seal kit |

# 14.2.3 LIGHT 2 LEVER CONTROL, EL. ON/OF, ELECTRICAL PARTS

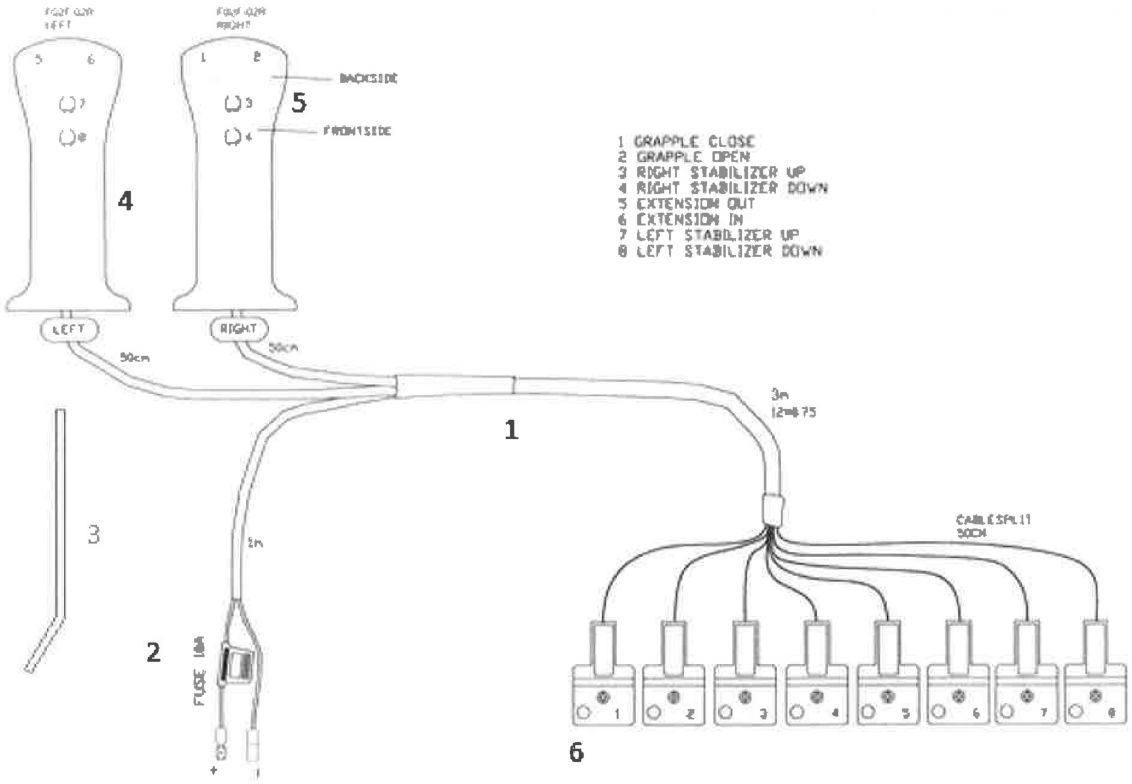


| RESERVEDELSLISTE – SPARE PARTS LIST | | | | |
|---|---|---|---|---|
| Pos. | Qty | Item No./ Varenummer | Beskrivelse | Description |
| 1 | 1 | IG430728 | El. sett for lettventil | Complete electric set |
| 2 | 1 | IG431733 | Sikring, 10 A | Fuse |
| 3 | 2 | IG431732 | Spak | Lever |
| 4 | 2 | IG431738 | Handtak | Handle |
| 5 | 8 | IG431736 | Microbryter | Microswitch |
| 6 | 8 | IG090276 | El. kontakt | El. contact |

## 15. STICKERS

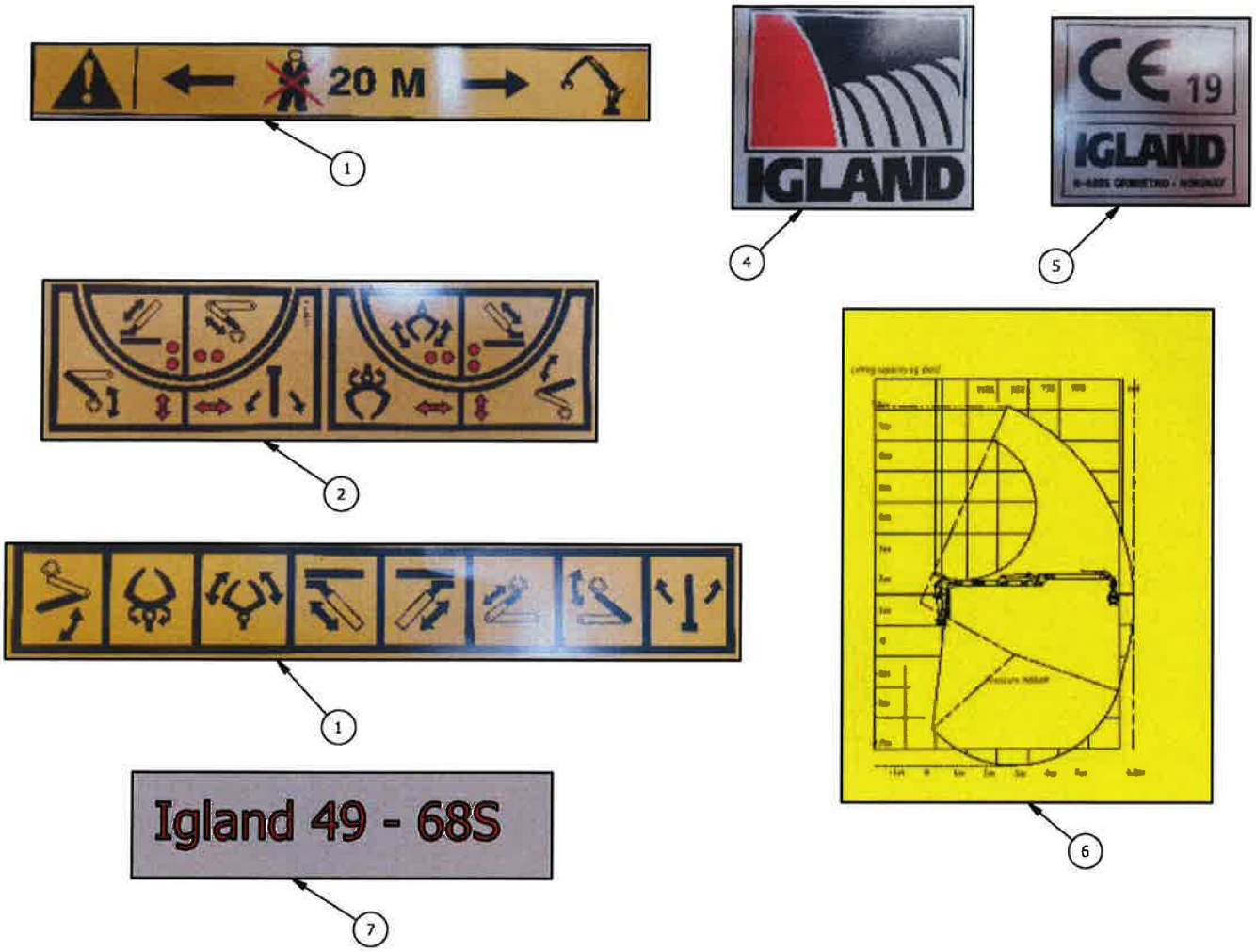


| RESERVEDELSLISTE – SPARE PARTS LIST | | | | |
|---|---|---|---|---|
| Pos. | Qty | Item No./ Varenummer | Beskrivelse | Description |
| 1 | 2 | IG392024 | Klistremerke, risikoson | Safety sticker |
| 2 | 1 | IG392025 | Klistremerke, betjenings symboler | Control panel with el. on/of sticker |
| 3 | 1 | IG392026 | Klistremerke, betjenings symboler | Control panel sticker |
| 4 | 1 | IG390815 | Klistremerke, igland | Igland sticker |
| 5 | 1 | IG392006 | Klistremerke, CE, (NA) | CE sticker |
| 6 | 1 | IG391254 | Klistremerke, løfte diagram | Lifting diagram sticker |
| 7 | 2 | IG391246 | Klistremerke, 49-68S | Model sticker |

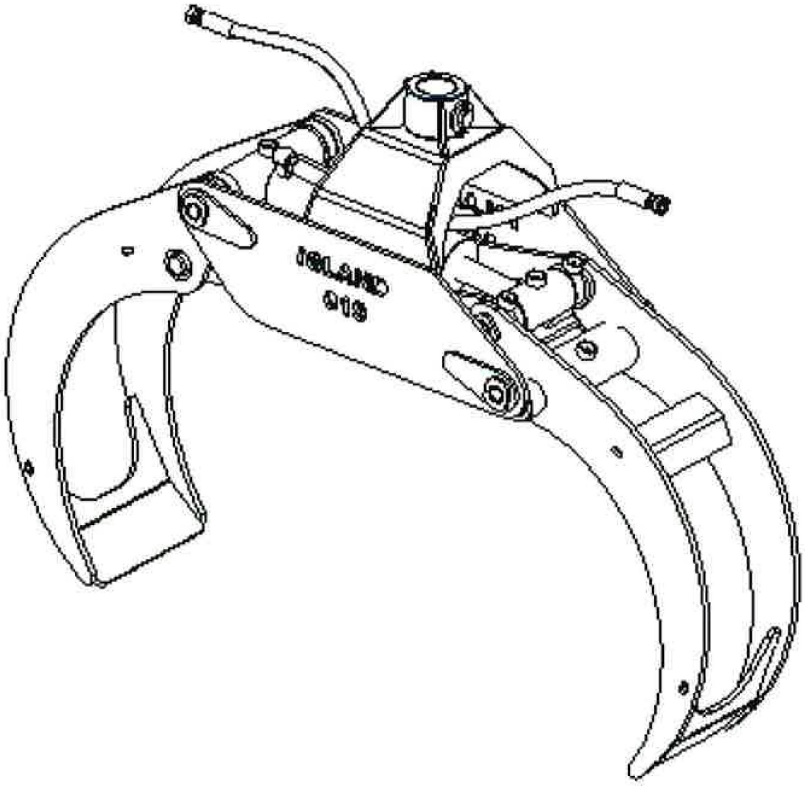


# IGLAND 019

## Parts Catalogue

RESERVEDELSLISTE - SPARE PARTS LIST

# Igland 019

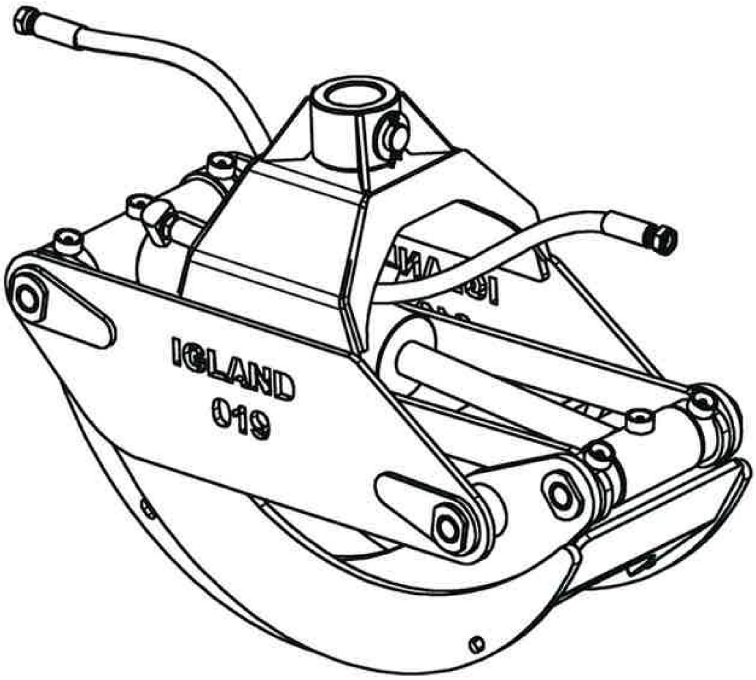


**© Nosted & AS**
- Gjengivelse av tekst og tegninger uten tillatelse forbudt.
- Reproduction of text or illustrations without permission is prohibited.
- Eine wiedergabe von Texten und Zeichnungen ohne unsere Genehmigung ist nicht gestattet.
- Interdiction de taute reproduction de texts ou d'illustations sans autorisation prèalable

Nøsted & AS
Avd. Grimstad
Industriveien 30
4879 Grimstad, Norway
Phone + 47 37 25 62 00
Fax + 47 37 25 62 01
Mail: corporate@igland-as.com
http://www.igland-as.com

| | |
|---|---|
| **Approved:** | Revised: |
| | Issued: 2020.03.31 |
| | P/N 390605 |
| | |

IGLAND

CONTENTS

1. MAIN PARTS.....4

2. HYDRAULICS.....5

3. GRAPPLE ASSEMBLY.....6

3.1 Outer arm.....7

# 1. MAIN PARTS

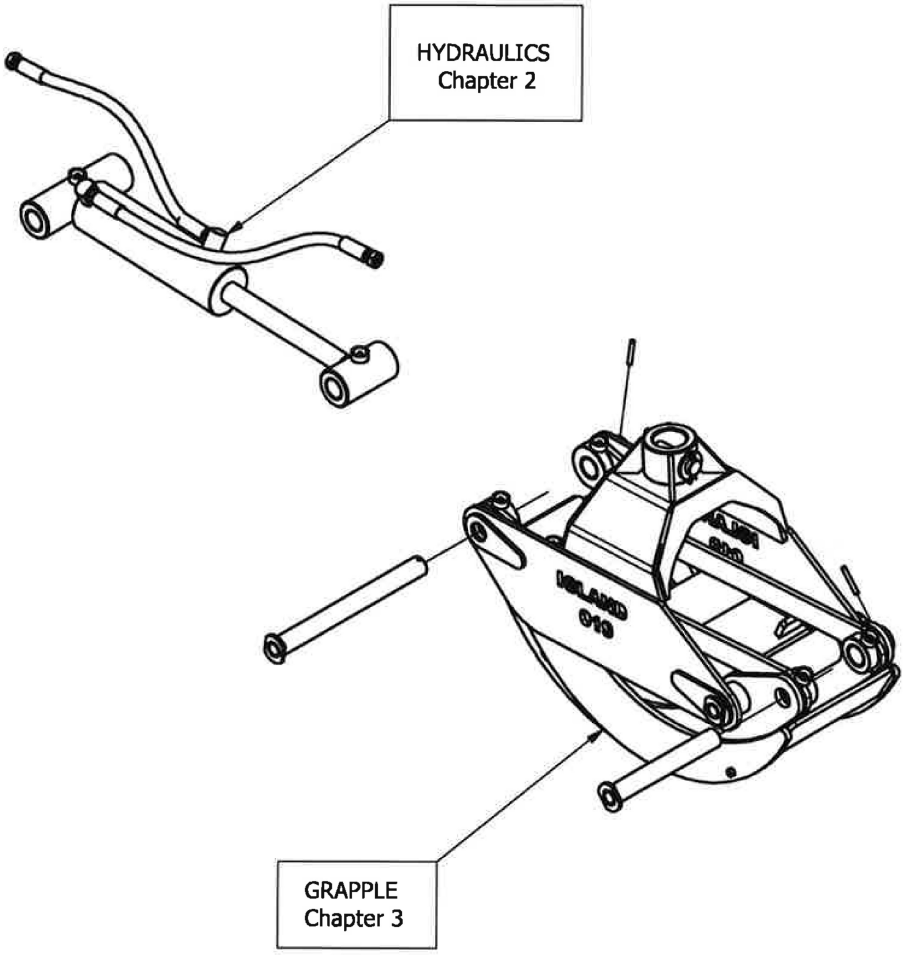

## 2. HYDRAULICS

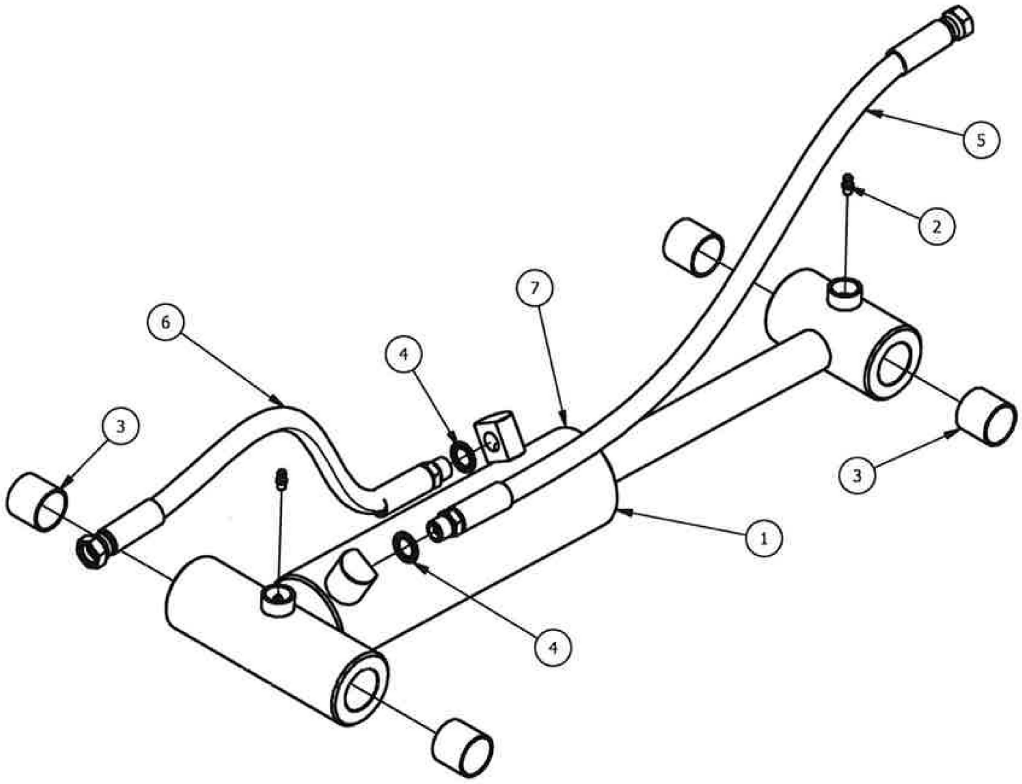


| RESERVEDELSLISTE – SPARE PARTS LIST | | | | |
|---|---|---|---|---|
| Pos. | Qty | Item No./ Varenummer | Beskrivelse | Description |
| 1 | 1 | 430812 | Sylinder | Hydraulic cylinder |
| 2 | 2 | 017403 | Fettnippel | Lubricating Nipple |
| 3 | 4 | 430818 | Hylse | Bushing |
| 4 | 2 | 047142 | Skive m/gummipakning | Washer w/rubber |
| 5 | 1 | 058056 | Slange 580mm | Hose 3/8 l-580 |
| 6 | 1 | 058053 | Slange 430mm | Hose 3/8 l-430 |
| 7 | 1 | 430814 | Pakning sett, sylinder | Cylinder repair kit |

## 3. GRAPPLE ASSEMBLY

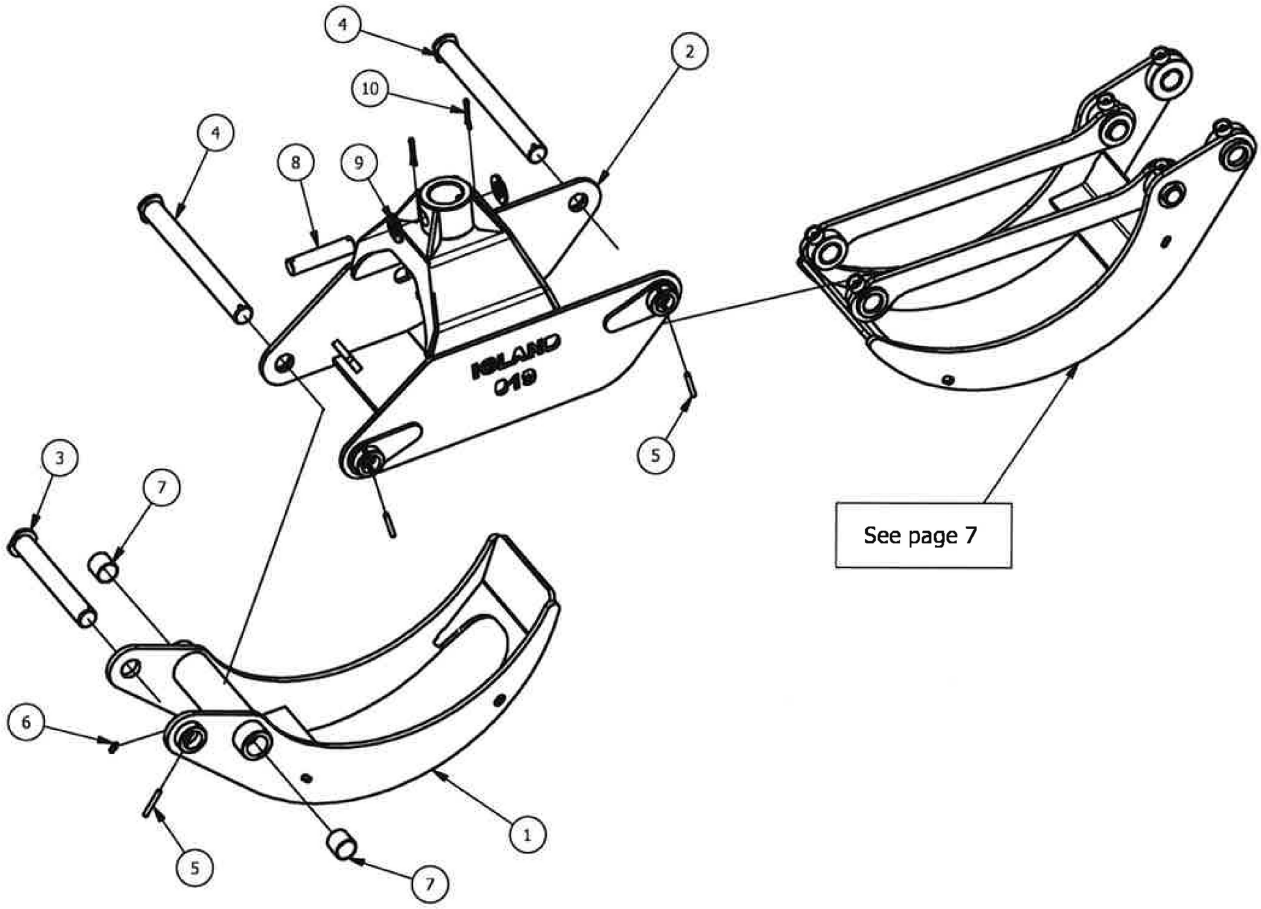


| RESERVEDELSLISTE – SPARE PARTS LIST | | | | |
|---|---|---|---|---|
| Pos. | Qty | Item No./ Varenummer | Beskrivelse | Description |
| 1 | 1 | 430816 | Indre gripeklo | Inner arm |
| 2 | 1 | 430820 | Ramme | Frame |
| 3 | 1 | 430821 | Bolt | Pin |
| 4 | 2 | 430822 | Bolt | Pin |
| 5 | 3 | 020822 | Fjærsplint | Spring pin |
| 6 | 7 | 017403 | Fettnippel | Lubricating Nipple |
| 7 | 8 | 430818 | Hylse | Bushing |
| 8 | 1 | 430823 | Bolt | Pin |
| 9 | 2 | 012514 | Skive | Washer |
| 10 | 2 | 021056 | Splint | Split Pin |

## 3.1 Outer arm

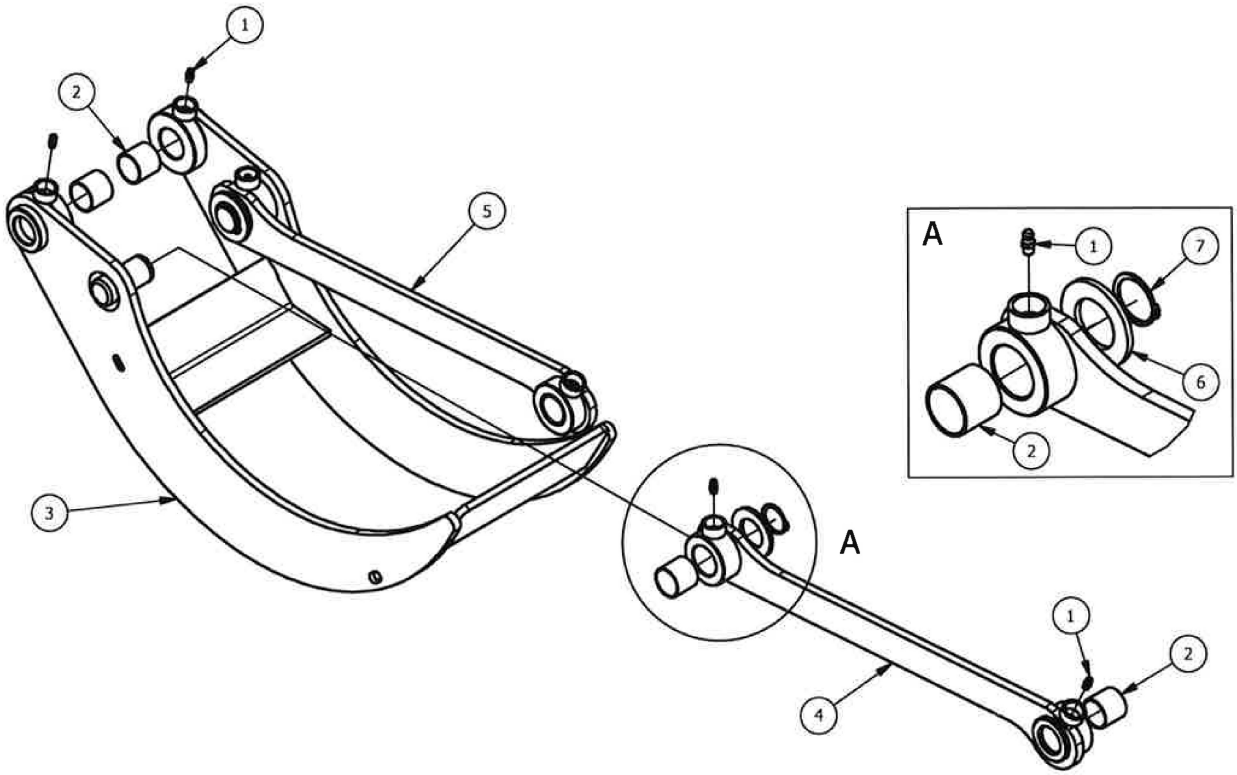


| RESERVEDELSLISTE – SPARE PARTS LIST | | | | |
|---|---|---|---|---|
| Pos. | Qty | Item No./ Varenummer | Beskrivelse | Description |
| 1 | 6 | 017403 | Fettnippel | Lubricating Nipple |
| 2 | 6 | 430818 | Hylse | Bushing |
| 3 | 1 | 430815 | Ytre gripeklo | Outer arm |
| 4 | 1 | 430824 | Stag | Left joint |
| 5 | 1 | 430825 | Stag | Right joint |
| 6 | 2 | 012594 | Skive | Washer |
| 7 | 2 | 026725 | Seegersikring | Retaining rings |